起重機械製造專家
EXPERT OF BOOM CRANE PRODUCTION

GW

技術卓越值得信賴
TRUSTWORTHY TECHNIQUE

頂級起重機新基準
SUPERIOR STANDARD OF CARANE

安全・敏捷・效率
SAFE AGILE EFFICIENCY

台灣自有領導品牌
TAIWAN LEADING OBM

研發 R&D
設計 DESIGN
製造 MANUFACTURE
維修 MAINTAIN

營造・重工・運輸・漁業打拼的最佳幫手
GOOD ASSISTANT OF CONSTRUCTION INDUSTRY, HEAVY DUTY INDUSTRY, TRANSPORTION, FISHERY

公司簡介 (COMPANY INTRODUCTION)

本公司創立於1990年，從創立至今已製造5000多台各式起重及特種油壓機械，於2008年擴廠後，廠區面積已達6000多平方公尺，並由日本引進OTC(DAIHEN)焊接自動化機械人設備，以製式化生產流程，提高產量與品質控管，及加強人員培訓等…。

本公司歷年來皆秉持創新、實用為原則，並致力於新型機種研發及改良，以滿足顧客需求，例：底座承受力改良、旋轉角度改良、遙控動力改良、油封創新等…。

We are founded in 1990, and we raises been manufacturing more than 700 various types of cranes and hydraulic device. Expands the factory after 2008, 6000 square meters factory area has reached, and introduces OTC (DAIHEN) from Japan. To standard production process, rases the output and the quality control, strengthens the training of staff and so on .

Our company maintained the principle of innovation and practical over the years, and is committed to research and development of new models and improved to meet customer demand. For example: Base improved affordability. Rotation angle improvement. Remote control to improve. Innovate oil seal and so on.

本公司所使用之油壓機械元件，均採用歐洲原裝進口，材質優越，品質保証。

Our company using the hydraulic compoment machinery are original imported European, the material quality is superior, quality guaranteed.

油壓元件
(Hydraulic-compoment)

油壓泵浦
(Hydraulic-pump)

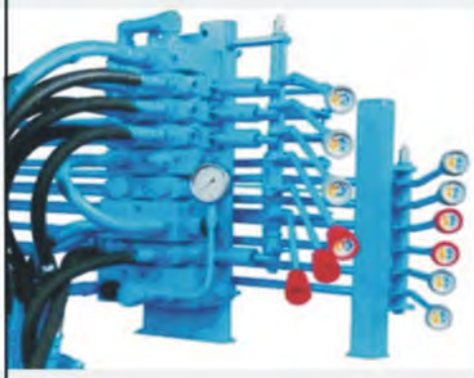

油壓開關
(Hydraulic-switch)

中華民國製造合格証明書 (Manufacturing licenses in R.O.C)

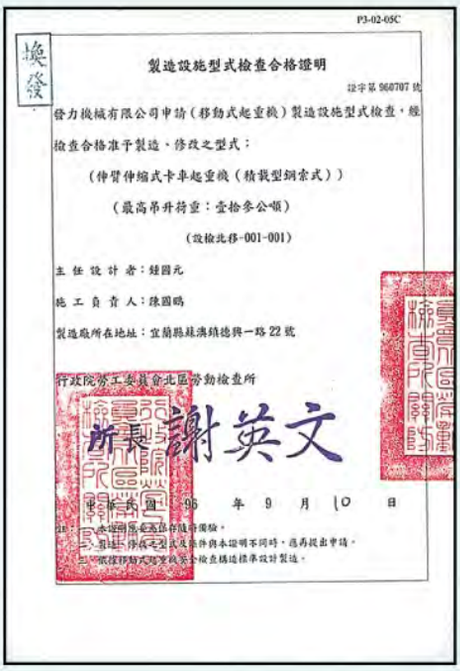

P3-02-05C

換發

製造設施型式檢查合格證明

設字第 960707 號

發力機械有限公司申請（移動式起重機）製造設施型式檢查，經檢查合格准予製造、修改之型式：

（伸臂伸縮式卡車起重機（積載型鋼索式））

（最高吊升荷重：壹拾參公噸）

（設檢北移-001-001）

主任設計者：錢國元

施工負責人：陳國鴻

製造廠所在地址：宜蘭縣蘇澳鎮德興一路 22 號

行政院勞工委員會北區勞動檢查所

所長 謝英文

中華民國 96 年 9 月 10 日

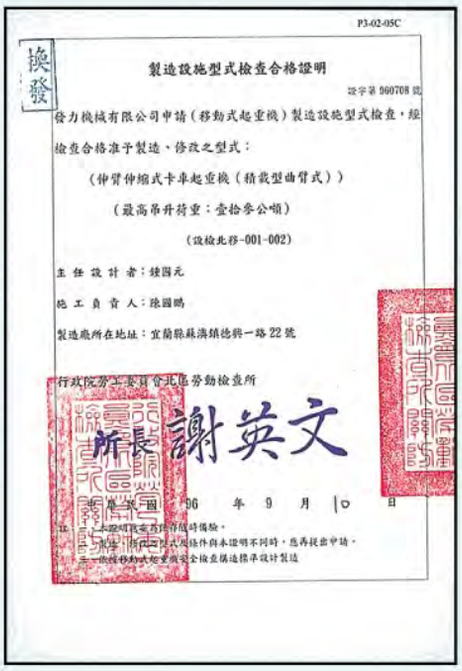

P3-02-05C

換發

製造設施型式檢查合格證明

設字第 960708 號

發力機械有限公司申請（移動式起重機）製造設施型式檢查，經檢查合格准予製造、修改之型式：

（伸臂伸縮式卡車起重機（積載型曲臂式））

（最高吊升荷重：壹拾參公噸）

（設檢北移-001-002）

主任設計者：錢國元

施工負責人：陳國鴻

製造廠所在地址：宜蘭縣蘇澳鎮德興一路 22 號

行政院勞工委員會北區勞動檢查所

所長 謝英文

中華民國 96 年 9 月 10 日

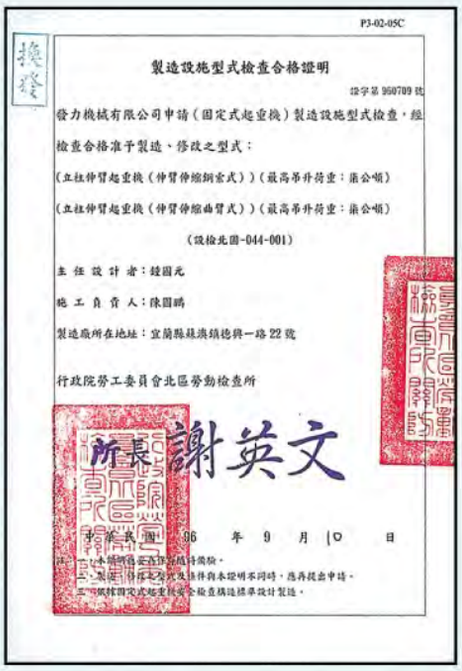

P3-02-05C

換發

製造設施型式檢查合格證明

設字第 960709 號

發力機械有限公司申請（固定式起重機）製造設施型式檢查，經檢查合格准予製造、修改之型式：

（立柱伸臂起重機（伸臂伸縮鋼索式））（最高吊升荷重：捌公噸）

（立柱伸臂起重機（伸臂伸縮曲臂式））（最高吊升荷重：捌公噸）

（設檢北固-044-001）

主任設計者：錢國元

施工負責人：陳國鴻

製造廠所在地址：宜蘭縣蘇澳鎮德興一路 22 號

行政院勞工委員會北區勞動檢查所

所長 謝英文

中華民國 96 年 9 月 10 日

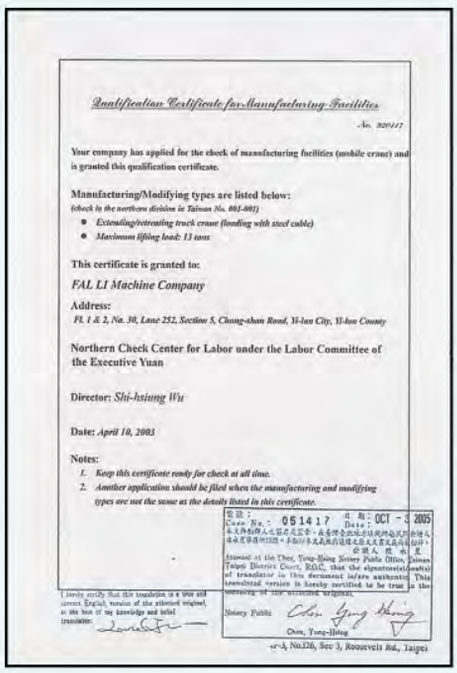

Qualification Certificate for Manufacturing Facilities

No. 920417

Your company has applied for the check of manufacturing facilities (mobile crane) and is granted this qualification certificate.

Manufacturing/Modifying types are listed below:
(check in the northern division in Taiwan No. 001-001)

- Extending/retreating truck crane (loading with steel cable)
- Maximum lifting load: 13 tons

This certificate is granted to:

FAL LI Machine Company

Address:
Fl. 1 & 2, No. 30, Lane 252, Section 5, Chung-shan Road, Yi-lan City, Yi-lan County

Northern Check Center for Labor under the Labor Committee of the Executive Yuan

Director: Shi-hsiung Wu

Date: April 10, 2003

Notes:
1. Keep this certificate ready for check at all time.
2. Another application should be filed when the manufacturing and modifying types are not the same as the details listed in this certificate.

Qualification Certificate for Manufacturing Facilities

No. 930201

Your company has applied for the check of manufacturing facilities (mobile crane) and is granted this qualification certificate.

Manufacturing/Modifying types are listed below:
(check in the northern division in Taiwan No. 001-002)

- Extending/retreating truck crane (loading with Articulating boom lift)
- Maximum lifting load: 13 tons

This certificate is granted to:

FAL LI Machine Company

Address:
Fl. 1 & 2, No. 30, Lane 252, Section 5, Chung-shan Road, Yi-lan City, Yi-lan County

Northern Check Center for Labor under the Labor Committee of the Executive Yuan

Director: Shi-hsiung Wu

Date: oct 27, 2004

Notes:
1. Keep this certificate ready for check at all time.
2. Another application should be filed when the manufacturing and modifying types are not the same as the details listed in this certificate.

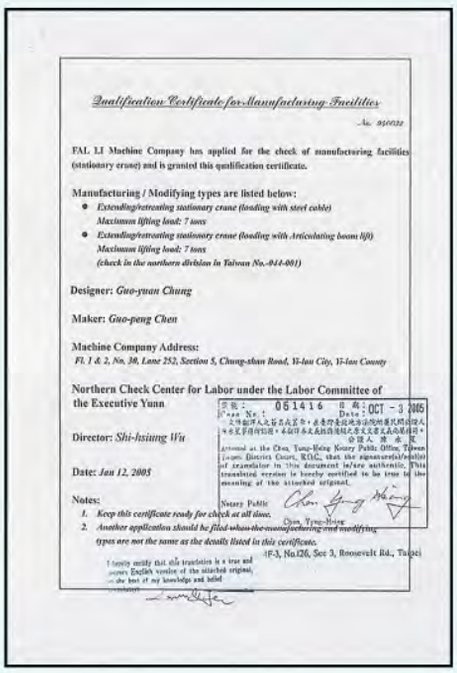

Qualification Certificate for Manufacturing Facilities

No. 940032

FAL LI Machine Company has applied for the check of manufacturing facilities (stationary crane) and is granted this qualification certificate.

Manufacturing / Modifying types are listed below:

- Extending/retreating stationary crane (loading with steel cable)
  Maximum lifting load: 7 tons
- Extending/retreating stationary crane (loading with Articulating boom lift)
  Maximum lifting load: 7 tons
  (check in the northern division in Taiwan No.-044-001)

Designer: Guo-yuan Chung

Maker: Guo-peng Chen

Machine Company Address:
Fl. 1 & 2, No. 30, Lane 252, Section 5, Chung-shan Road, Yi-lan City, Yi-lan County

Northern Check Center for Labor under the Labor Committee of the Executive Yuan

Director: Shi-hsiung Wu

Date: Jan 12, 2005

Notes:
1. Keep this certificate ready for check at all time.
2. Another application should be filed when the manufacturing and modifying types are not the same as the details listed in this certificate.

直臂式鋼索型製造証
(Manufacturing licenes for telescopic straight crane with cable wire)

屈臂折疊式製造証
(Manufacturing license for articulate cranes)

直臂、屈臂、固定伸臂式製造証
(Manufacturing license for cranes with telescopic boom. articulate boom and fixedestendable boom.)

專業製造項目 (Manufacturing items include)

(1) 油壓式起重機：直臂鋼索式、屈臂折疊式、屈臂抓斗式。
(2) 工廠內及碼頭：固定伸臂式、直臂及屈臂式。
(3) 船舶用起重機：直臂鋼索式(所有鋼材皆鍍鋅處理)。
(4) 特種油壓機械：2~20噸絞盤機、2 段式延伸屈臂式高空作業車、貨櫃起卸機等…。

(1) Hydraulic cranes : Telescopic straight boom with cable wire.Articulate boom.
(2) Cranes used in factory or on dock : Fixed jib crane.Straight boom and articulate boom.
(3) Ship crane : Telescopic straight boom with cable wire. (All are galvanized steel deal.)
(4) Special hydraulic device : 2~20ton winch device, Two-stage extension of articulate and cherry picker, Sidelifters.

製程圖 (Manufacturing process flow chart)

業務部門 (Sales department)
總經理 (General manager)
製圖 (Map-making)
強度計算 (Strength calculation)
總廠長 (Director)

→ (1) 切折型板 (Cutting and folding boards)
→ (2) 冷卻工程 (Cooling processing)
→ (3) 零件加工 (Part fabricating)
→ (4) 油壓缸組合 (Cylinder assembing)
→ (5) 底座組合 (Base assembing)
→ (6) 伸臂組合 (Boom assembing)
→ (7) 底座檢驗高壓力 (High pressure test for base)
→ (8) 伸臂檢驗高壓力 (High pressure test for boom)
→ (9) 廠長二合一檢驗高壓力 (High pressure test for base and boom by foreman)

GW 新4噸5噸7噸10噸*98型-雙珠旋轉座

(GW-new 4 ton, 5 ton, 7 ton, 10 ton,*98 type-rotation seat with double-bead)

超越移動式起重機的世界、採用 **超大強力螺絲**

(Surmount of the mobile cranes world. The use of super-strong screws)

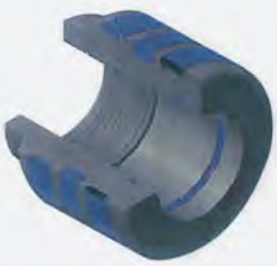

活塞270°視感圖

(Piston as the sense of 270-degree view picture)

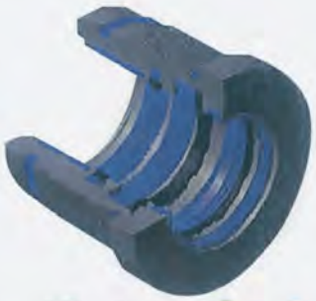

缸蓋270°視感圖

(Gland as the sense of 270-degree view picture)

內主體(Within the main)

上滾珠組 (Group on the ball)

組合體(Assembly)

下滾珠組 (Group under the ball)

QA-42-59-79型全旋式直臂型-安裝圖

GW-QA-42-59-79 360 degrees rotation entire-installation picture

單位(unit):m/m

QA-4200型 安裝圖 (GW-QA-4200 type installation picture)

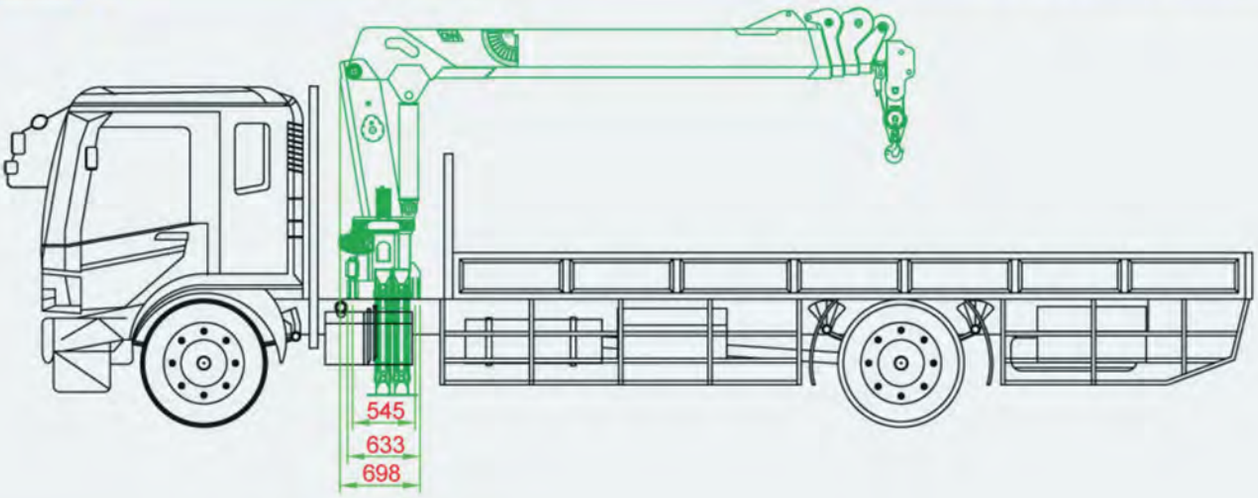

QA-5900型 安裝圖 (GW-QA-5900 type installation picture)

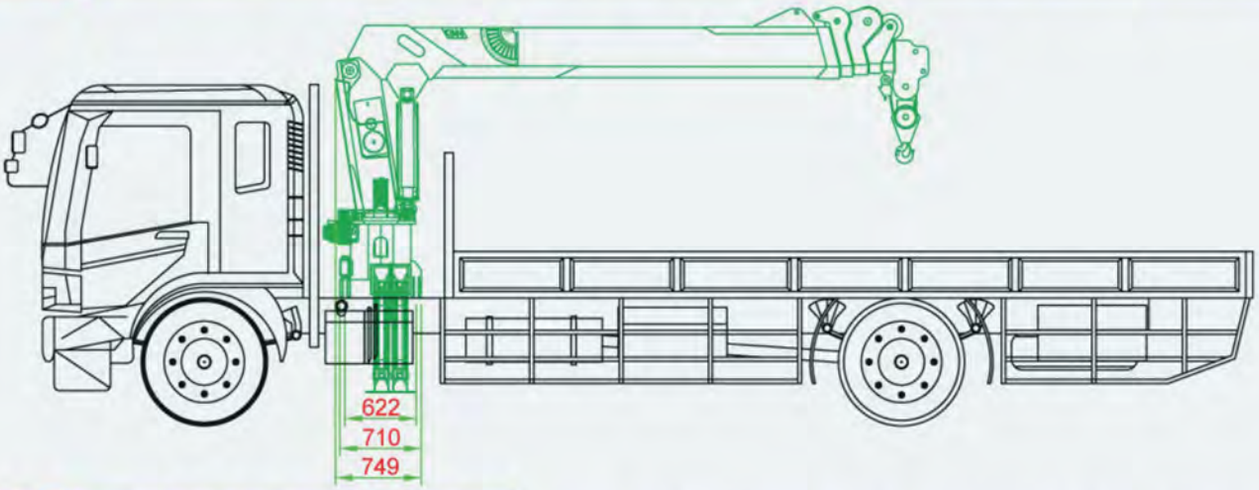

QA-7900型 安裝圖 (GW-QA-7900 type installation picture)

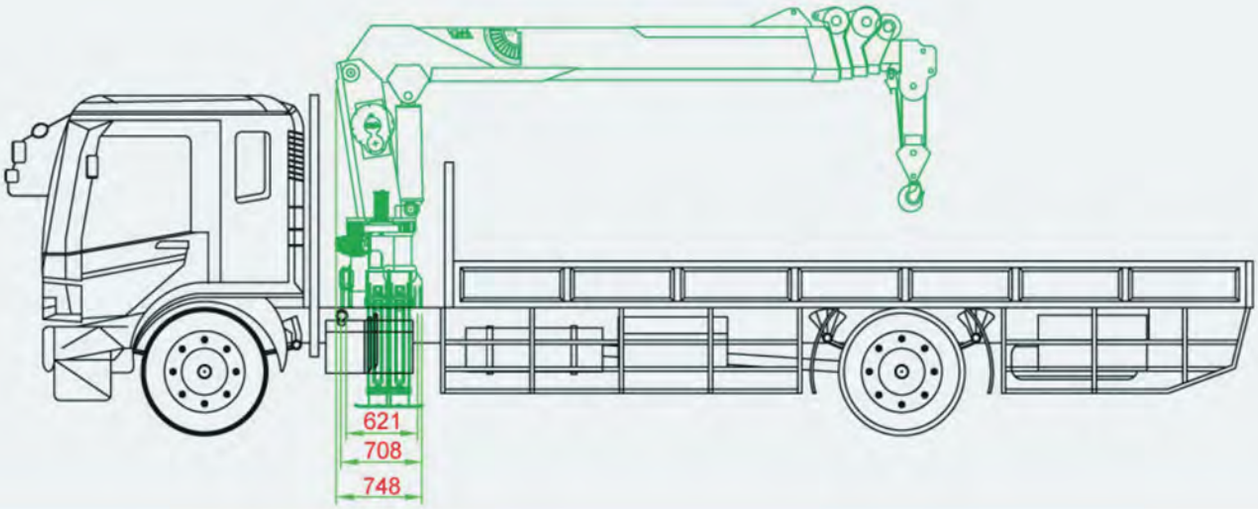

移動式起重機的英雄 (Mobile crane's hero)

頂級卓越　起重規範.
起重360度旋轉. 延伸一枝獨秀.
較勁世界各國品牌起重機

GW 稱霸台灣市場 No.1

GW-The top of crane standard remarkable.
Crane 360 degrees rotation.
Outstanding in this field.
Dominates market in Taiwan.

5975型 起重堆高機 4, 100kg
(5975 type crane truck lifting capacity up to 4,100kg)

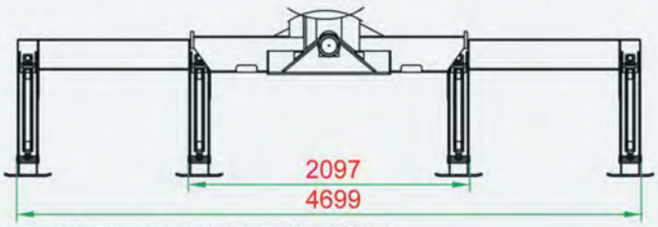

GW-QA-4200型立腳收藏展開圖
GW-QA-4200 type expand picture of the outrigger boom retrieval)

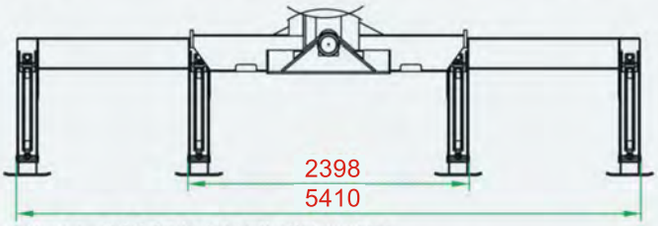

GW-QA-5900型立腳收藏展開圖
(GW-QA-5900 type expand picture of the outrigger boom retrieval)

5905型 安裝起重機及拖吊架
(5905 type the installation crane and trailer landing)

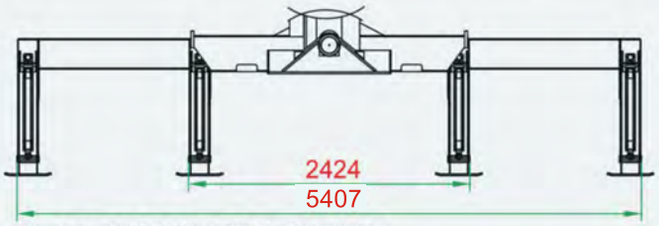

GW-QA-7900型立腳收藏展開圖
(GW-QA-7900 type expand picture of the outrigger boom retrieval)

起重界新崛起的卓越角色 (Crane new role in the rise of remarkable)

高速度、高效率絞盤
(High speed, great efficiency with winch)

GW QA-4200型 臂手長度、作業半徑、揚程高度

GW-QA-4200 type Boom length, operating radius, lift height

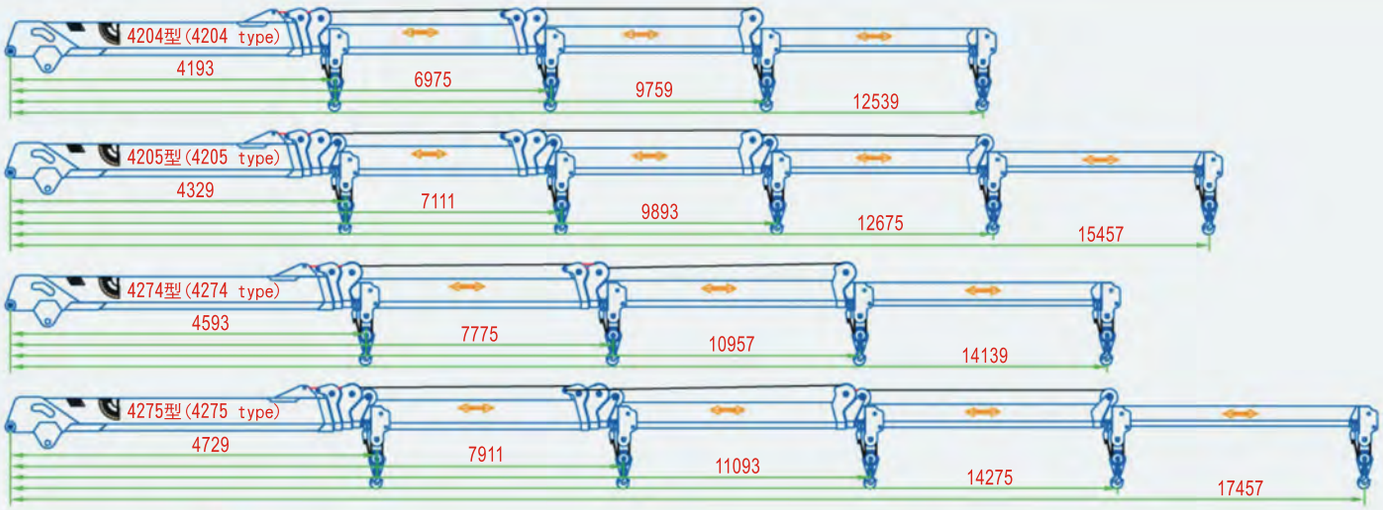

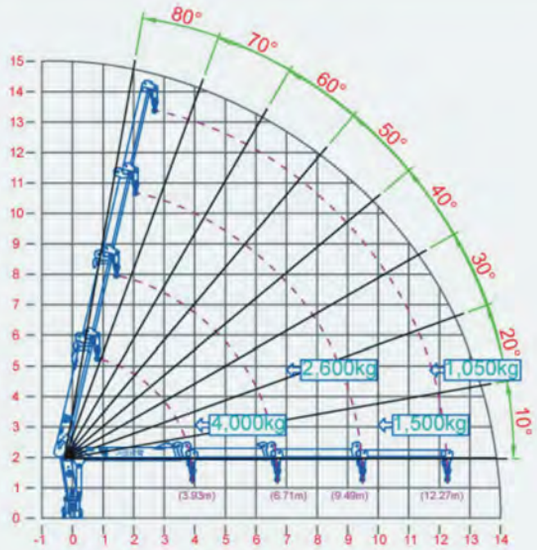

GW-QA-4204型 作業、揚程表(單位m)
GW-QA-4204 type work, lift table(Unit:m)

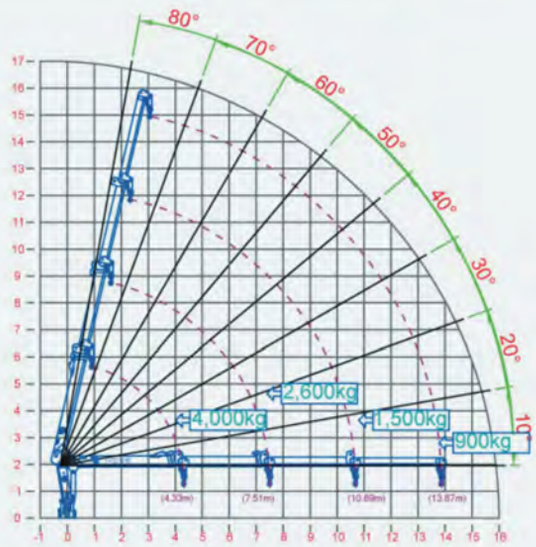

GW-QA-4274型 作業、揚程表(單位m)
GW-QA-4274 type work, lift table(Unit:m)

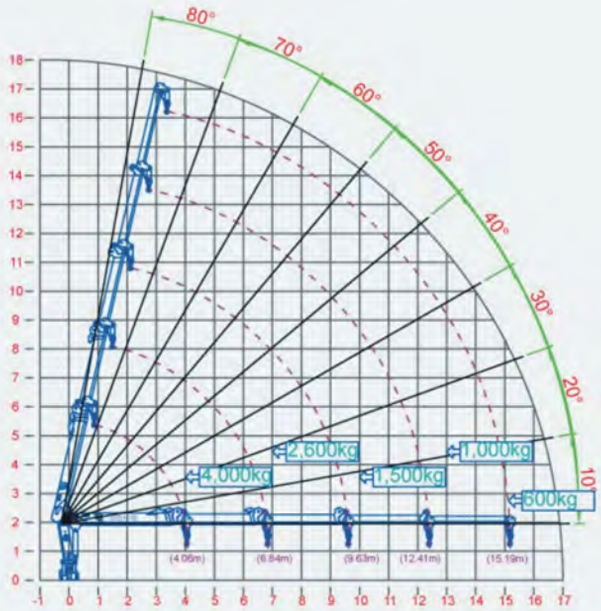

GW-QA-4205型 作業、揚程表(單位m)
GW-QA-4205 type work, lift table(Unit:m)

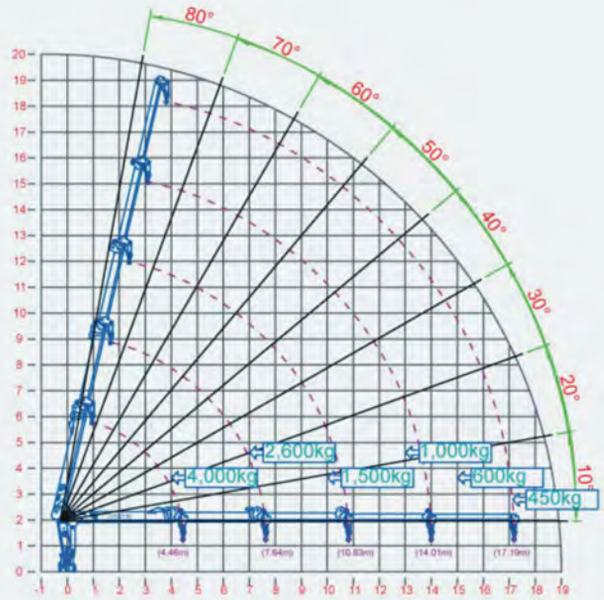

GW-QA-4275型 作業、揚程表(單位m)
GW-QA-4275 type work, lift table(Unit:m)

揚高40°以上可增加吊能50%(The angle of lift above 40 degrees can increase to 50% crane capacity)

QA-5900型 臂手長度、作業半徑、揚程高度

GW-QA-5900 type Boom length, operating radius, lift height

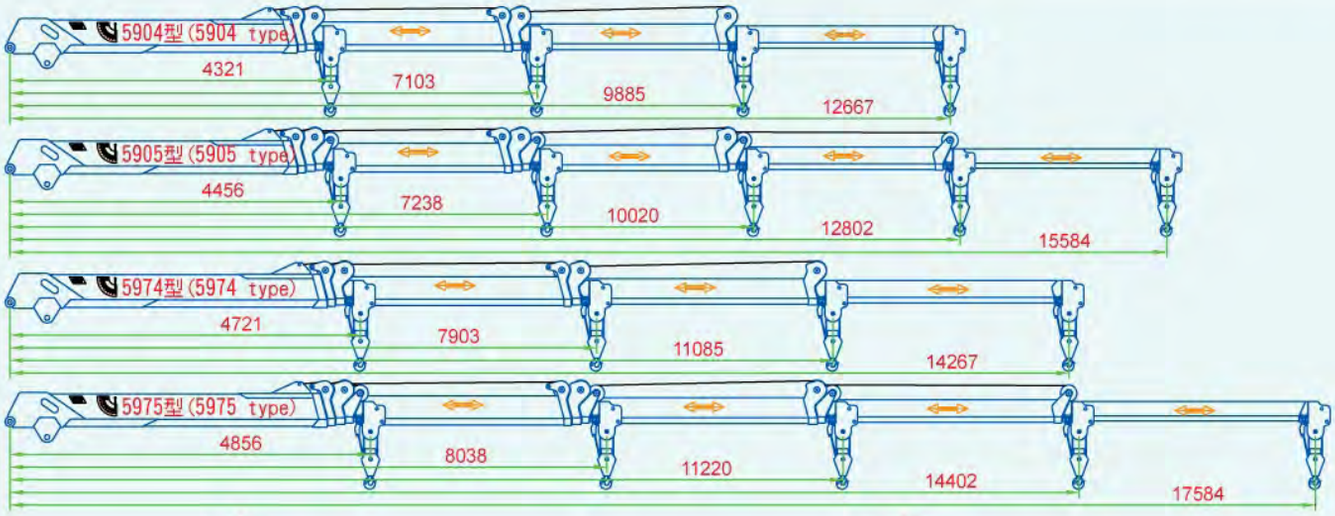

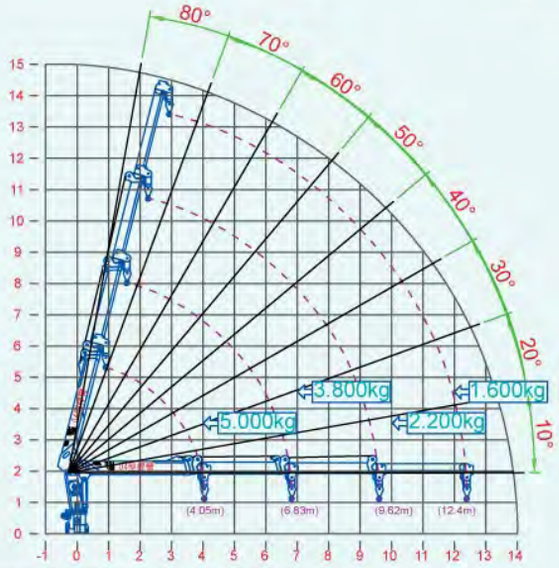

GW-QA-5904型 作業、揚程表(單位m)
GW-QA-5904 type work, lift table(Unit:m)

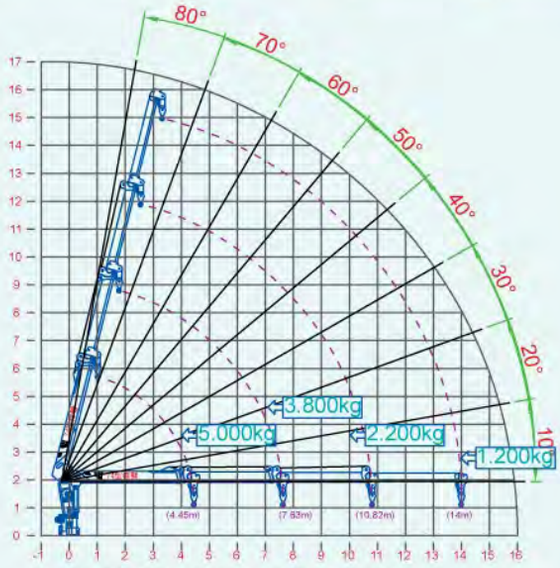

GW-QA-5974型 作業、揚程表(單位m)
GW-QA-5974 type work, lift table (Unit:m)

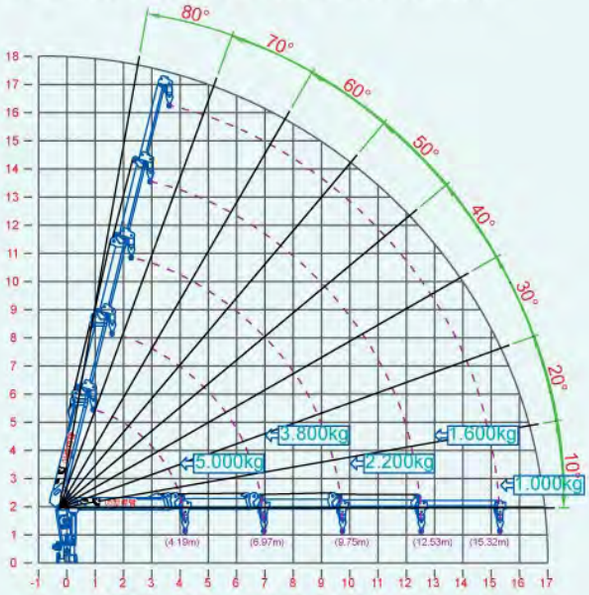

GW-QA-5905型 作業、揚程表(單位m)
GW-QA-5905 type work, lift table(Unit:m)

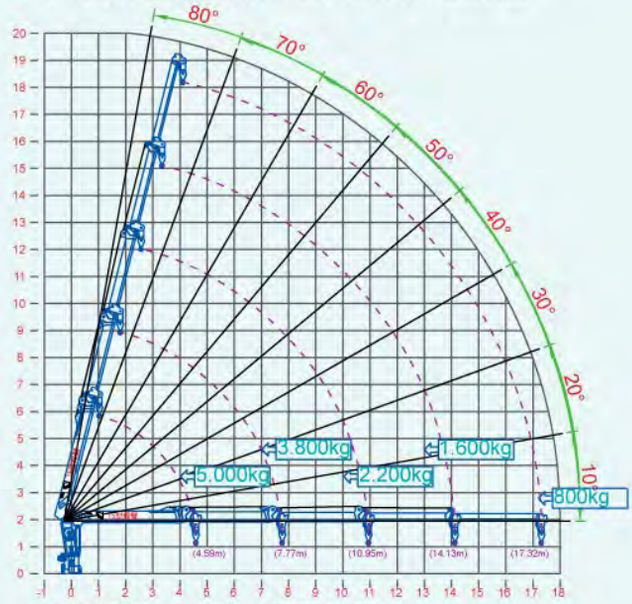

GW-QA-5975型 作業、揚程表(單位m)
GW-QA-5975 type work, lift table (Unit:m)

揚高40°以上可增加吊能50%(The angle of lift above 40 degrees can increase to 50% crane capacity)

QA-7900型 臂手長度、作業半徑、揚程高度

GW-QA-7900 type Boom length, operating radius, lift height

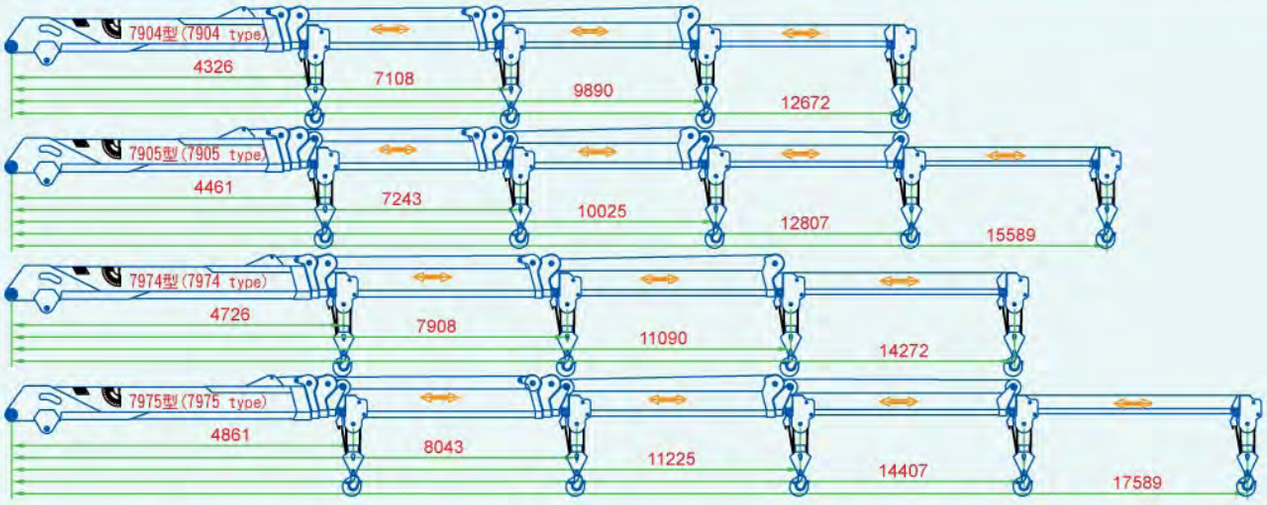

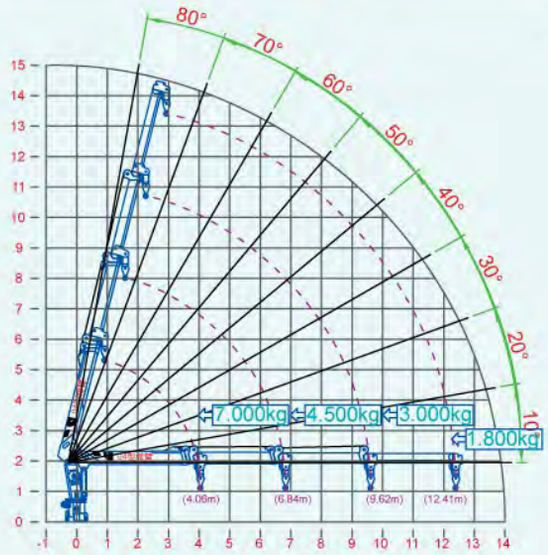

GW-QA-7904型 作業、揚程表(單位m)
GW-QA-7904 type work, lift table(Unit:m)

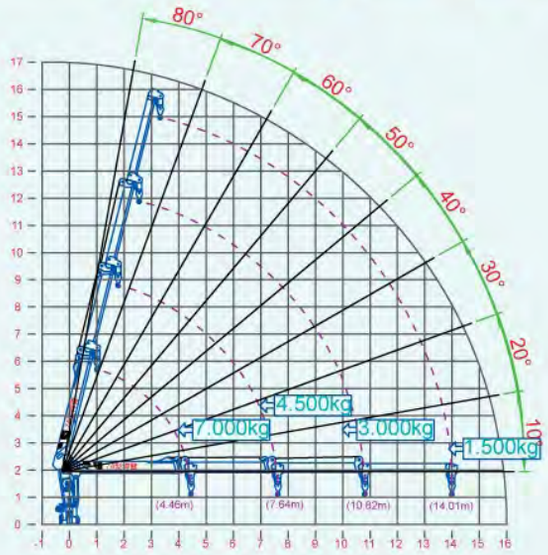

GW-QA-7974型 作業、揚程表(單位m)
GW-QA-7974 type work, lift table(Unit:m)

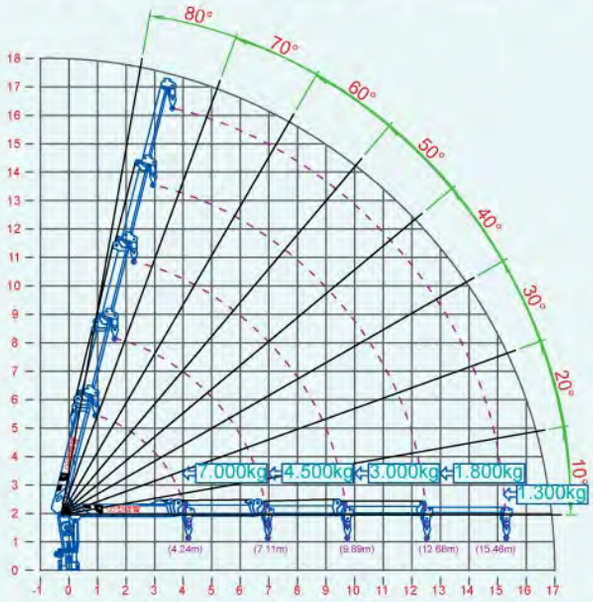

GW-QA-7905型 作業、揚程表(單位m)
GW-QA-7905 type work, lift table(Unit:m)

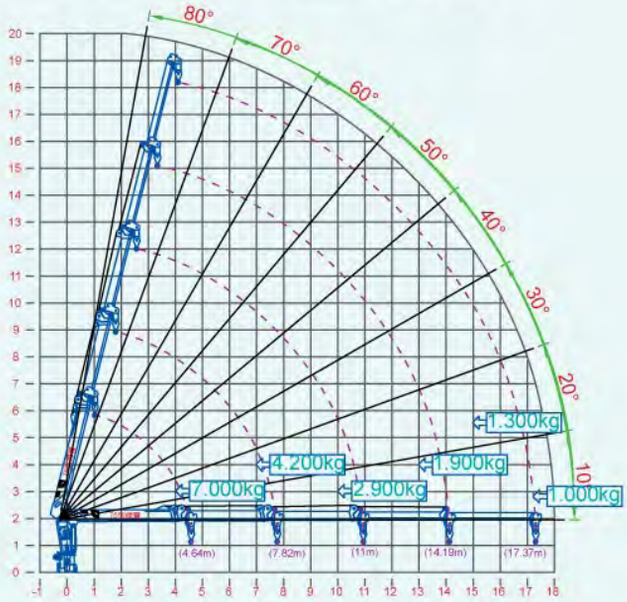

GW-QA-7975型 作業、揚程表(單位m)
GW-QA-7975 type work, lift table(Unit:m)

揚高40°以上可增加吊能50%(The angle of lift above 40 degrees can increase to 50% crane capacity)

QA-42-59-79型技術規格表

GW-QA-42-59-79 type technical specifications table

吊 桿 型 式 (Types of crane)	GW-QA-3900 全油壓驅動，同步延伸直臂式。 (GW-QA-3900 Same-time extension of straight arm shaft with hydraulic-control)
吊桿節數、收藏、延伸 Sections of crane (retrieval/extending)	4~5 節，收藏最短 3.93m ，延伸最長 17.2m 。 (4~5 sections; Minimum length of 3.93m for retrieval and maximum length of 17.2m for extending.)
立拱揚程角度 (The angle of lift for column)	水平以上 76 度。 (Level above 76 degrees.)
立拱揚程速度 (Lifting speed for column)	高速 12 秒，可微調低速。 (Maximum speed of 12 seconds and low speed can be adjusted.)
絞盤單車速度 (Single-car speed for winch)	高速時 38 m /分，可微調低速 (Maximum speed of 38m/minute and low speed can be adjusted.)
絞盤鋼索，容許拉力 (Winch cable/torque allowed)	8m/m $\frac{6}{29}$ 長110m ，1.5t (8m/m $\frac{6}{29}$ long 110m, 1.5t.)
絞盤剎車型式 (Type of brake for winch)	1. 靜音式剎車皮無段數。 2. 油路剎車。 (1. Silent-type brake pads without the tier number. 2. oil circuit brake.)
旋轉角度/速度 (Rotation angle/speed)	360 度連續旋轉，可微調高、低速。 (360 degrees continuous rotation can be adjusted high and low speed.)
延伸速度 (Extending speed)	高速時 26 秒，可微調低速。 (Maximum speed of 26 seconds and low speed can be adjusted.)
延伸腳收藏/延伸 (Retrieval/extending of outrigger boom)	2.1m/4.7m
油壓系統幫浦型式 (Type of pump for hydraulic system)	活塞式幫浦。 (Piston-typed pump.)
控制閥 (Control valve)	可變速多功能控制閥及安全閥 (Multiple speeds and functions control valve and safety valve.)
標準安全保險配備 (Standard safety insurance equipment)	1. 油壓缸逆止閥3組。 2. 安全閥2組。 3. 過捲警報器。 (1. 3 sets of stopper valve for cylinder. 2. 2 sets for safety valve. 3. alarm for over-reeling.)
搭配車輛 (Vehicles matching)	總重 11t 以上。 (Total weight of more than 11t.)
自總重 (Gross weight)	2.3t~2.5t

吊 桿 型 式 (Types of crane)	GW-QA-5900 全油壓驅動，同步延伸直臂式。 (GW-QA-5900 Same-time extension of straight arm shaft with hydraulic-control)
吊桿節數、收藏、延伸 Sections of crane (retrieval/extending)	4~5 節，收藏最短 4.05m ，延伸最長 17.32m 。 (4~5 sections; Minimum length of 4.05m for retrieval and maximum length of 17.32m for extending.)
立拱揚程角度 (The angle of lift forcolumn)	水平以上 72度。 (Level above 72 degrees.)
立拱揚程速度 (Lifting speed for column)	高速 12秒，可微調低速。 (Maximum speed of 12 seconds and low speed can be adjusted.)
絞盤單車速度 (Single-car speed for winch)	高速時 38m /分，可微調低速 (Maximum speed of 38m/minute and low speed can be adjusted.)
絞盤鋼索，容許拉力 (Winch cable/torque allowed)	9m/m $\frac{6}{29}$ 長110m ，2.1t (9m/m $\frac{6}{29}$ long 110m, 2.1t.)
絞盤剎車型式 (Type of brake for winch)	1. 靜音式剎車皮無段數。 2. 油路剎車。 (1. Silent-type brake pads without the tier number. 2. oil circuit brake.)
旋轉角度/速度 (Rotation angle/speed)	360 度連續旋轉，可微調高、低速。 (360 degrees continuous rotation can be adjusted high and low speed.)
延伸速度 (Extending speed)	高速時 26 秒，可微調低速。 (Maximum speed of 26 seconds and low speed can be adjusted.)
延伸腳收藏/延伸 (Retrieval/extending of outrigger boom)	2.4m/5.4m
油壓系統幫浦型式 (Type of pump for hydraulic system)	活塞式幫浦。 (Piston-typed pump.)
控制閥 (Control valve)	可變速多功能控制閥及安全閥 (Multiple speeds and functions control valve and safety valve.)
標準安全保險配備 (Standard safety insurance equipment)	1. 油壓缸逆止閥 3 組。 2. 安全閥 2 組。 3. 過捲警報器。 (1. 3 sets of stopper valve for cylinder. 2. 2 sets for safety valve. 3. alarm for over-reeling.)
搭配車輛 (Vehicles matching)	總重 12t 以上。 (Total weight of more than 12t.)
自總重 (Gross weight)	3.05t~3.25t

吊 桿 型 式 (Types of crane)	GW-QA-7900 全油壓驅動，同步延伸直臂式。 (GW-QA-7900 Same-time extension of straight arm shaft with hydraulic-control)
吊桿節數、收藏、延伸 Sections of crane (retrieval/extending)	4~5 節，收藏最短 4.06m ，延伸最長 17.32m 。 (4~5 sections; Minimum length of 4.06m for retrieval and maximum length of 17.32m for extending.)
立拱揚程角度 (The angle of lift for column)	水平以上 72 度。 (Level above 72 degrees.)
立拱揚程速度 (Lifting speed for column)	高速 9秒，可微調低速。 (Maximum speed of 9 seconds and low speed can be adjusted.)
絞盤單車速度 (Single-car speed for winch)	高速時 38m /分，可微調低速 (Maximum speed of 38m/minute and low speed can be adjusted.)
絞盤鋼索，容許拉力 (Winch cable/torque allowed)	10m/m $\frac{6}{29}$ 長110m ，2.8t (10m/m $\frac{6}{29}$ long 110m, 2.8t.)
絞盤剎車型式 (Type of brake for winch)	1. 靜音式剎車皮無段數。 2. 油路剎車。 (1. Silent-type brake pads without the tier number. 2. oil circuit brake.)
旋轉角度/速度 (Rotation angle/speed)	360 度連續旋轉，可微調高、低速。 (360 degrees continuous rotation can be adjusted high and low speed.)
延伸速度 (Extending speed)	高速時 21 秒，可微調低速。 (Maximum speed of 21 seconds and low speed can be adjusted.)
延伸腳收藏/延伸 (Retrieval/extending of outrigger boom)	2.42m/5.4m
油壓系統幫浦型式 (Type of pump for hydraulic system)	活塞式幫浦。 (Piston-typed pump.)
控制閥 (Control valve)	可變速多功能控制閥及安全閥 (Multiple speeds and functions control valve and safety valve.)
標準安全保險配備 (Standard safety insurance equipment)	1. 油壓缸逆止閥3組。 2. 安全閥2組。 3. 過捲警報器。 (1. 3 sets of stopper valve for cylinder. 2. 2 sets for safety valve. 3. alarm for over-reeling.)
搭配車輛 (Vehicles matching)	總重 15t 以上。 (Total weight of more than 15t.)
自總重 (Gross weight)	3.4t~3.8t

5975型
揚高20.8m

(5975 type, the angle of lift 20.8m)

GW-QA-10900型臂手長度、作業半徑、揚程高度

GW-QA-10900 type Boom length, operating radius, lift height

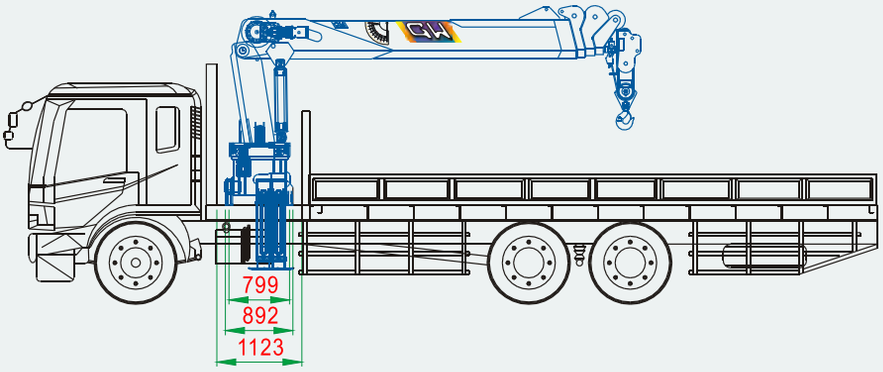

GW-QA-10900型安裝圖(GW-QA-10900 type installation picture)

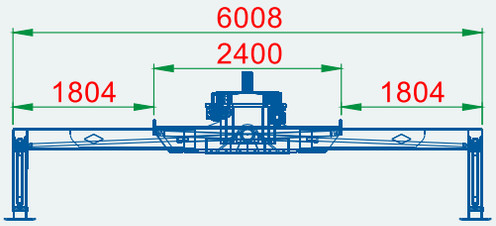

GW-QA-10900型 延伸腳展開圖
(GW-QA-10900 type outrigger boom expand picture)

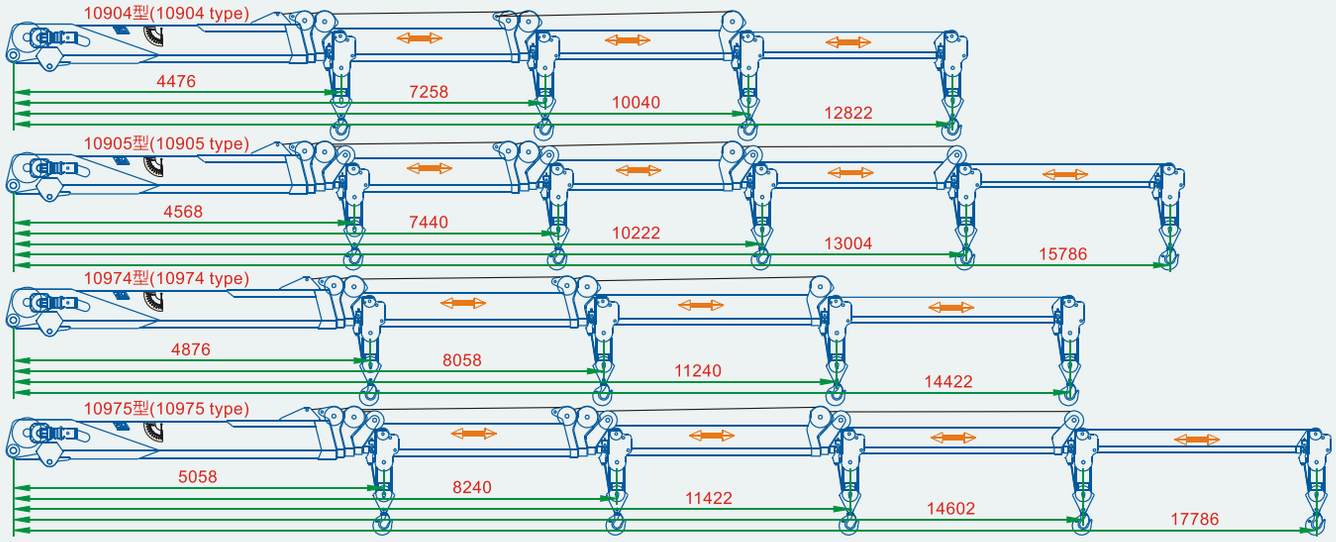

10噸A型桿臂長度圖 （10 tons A type boom length picture）

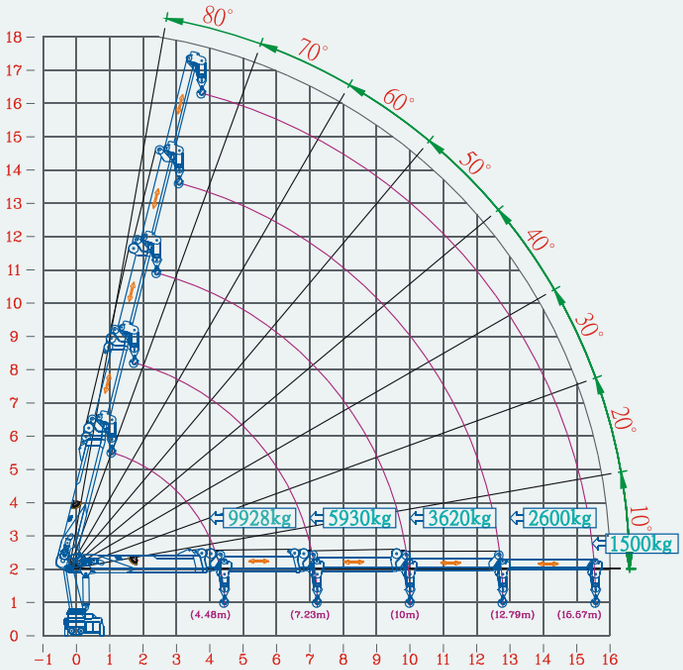

GW-QA-10905型 作業、揚程表(單位m)
GW-QA-10905 type work, lift table (Unit:m)

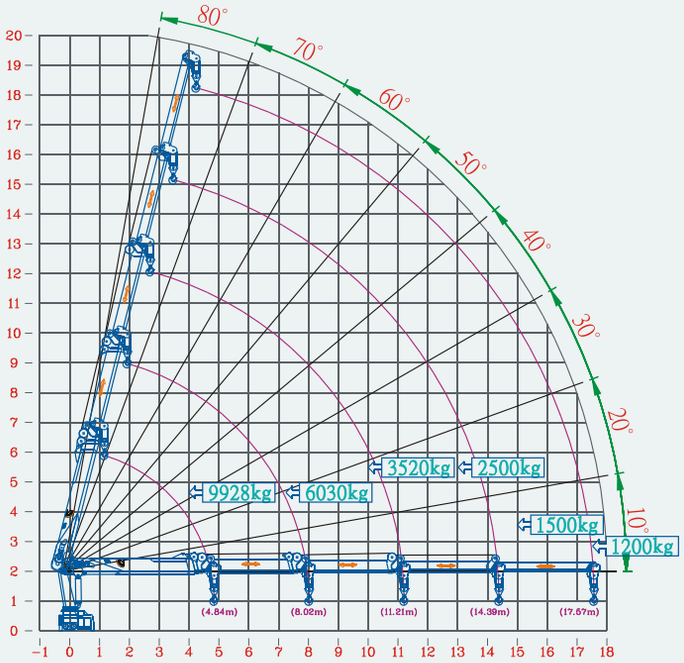

GW-QA-10975型 作業、揚程表(單位m)
GW-QA-10975 type work, lift table (Unit:m)

揚高40°以上可增加吊能50%(The angle of lift above 40 degrees can increase to 50% crane capacity)

GW-QA-10900型技術規格表

GW-QA-10900 type technical specifications table

吊 桿 型 式 (Types of crane)	QA-109-04全油壓驅動，同步延伸直臂式。 (QA-109-04 Same-time extension of straight arm shaft with hydraulic-control.)
吊桿節數、收藏、延伸 [Sections of crane (retrieval/extending)]	4節，收藏最短4.06m，延伸最長12.4m (4 sections; Minimum length of 4.06m for retrieval and maximum length of 12.4m for extending.)
立拱揚程角度 (Lifting angle of lift for column)	水平以上72度。 (Level above 72 degrees.)
立拱揚程速度 (Lifting speed for column)	高速14秒，可微調低速。 (Maximum speed of 14 seconds and low speed can be adjusted.
絞盤單車速度 (Single-car speed for winch)	高速時38m/分，可微調低速 (Maximum speed of 38m/minute and low speed can be adjusted.
絞盤鋼索，容許拉力 (Winch cable/torque allowed)	12 m/m $\frac{6}{29}$長110m,3.2t (12m/m $\frac{6}{29}$ long 110m, 3.2t.)
絞盤剎車型式 (Type of brake for winch)	1. 靜音式剎車皮無段數。2. 油路剎車。 (1. Slient-type brake pads without the tier number. 2. Oil circult brake.)
旋轉角度/速度 (Rotation angle/speed)	360度連續旋轉，可微調高、低速。 (360 degrees contsinuous rotation can be adjusted to be high low speed.)
延伸速度 (Extending speed)	高速時30秒，可微調低速。 (Maximum speed of 30 seconds and low speed can be adjusted.
延伸腳收藏/延伸 (Retrieval/extending of outrigger boom)	2.5 m/6m
油壓系統幫浦型式 (Type of pump for hydraulic system)	活塞式幫浦。 (Piston-typed pump.)
控制閥 (Control valve)	可變速多功能控制閥及安全閥 (Multiple speeds and functions control valve and safety valve.)
標準安全保險配備 (Standard safety insurance equipment)	1. 油壓缸逆止閥3組。 2. 安全閥2組。 3. 過捲警報器。 (1. 3 sets of stopper valve for cylinder. 2. 2 sets for safety valve. 3. Alarm for over-reeling.)
搭配車輛 (Vehicles matching)	總重21t以上。 (Total weight of more than 21t.)
自總重 (Gross weight)	5.05t

吊 桿 型 式 (Types of crane)	QA-109-05全油壓驅動，同步延伸直臂式。 (QA-109-05 Same-time extension of straight arm shaft with hydraulic-control.)
吊桿節數、收藏、延伸 [Sections of crane (retrieval/extending)]	5節，收藏最短4.3m，延伸最長15.4m (5 sections; Minimum length of 4.3m for retrieval and maximum length of 15.4m for extending.)
立拱揚程角度 (Lifting angle of lift for column)	水平以上72度。 (Level above 72 degrees.)
立拱揚程速度 (Lifting speed for column)	高速14秒，可微調低速。 (Maximum speed of 14 seconds and low speed can be adjusted.)
絞盤單車速度 (Single-car speed for winch)	高速時38m/分，可微調低速 (Maximum speed of 38m/minute and low speed can be adjusted.)
絞盤鋼索，容許拉力 (Winch cable/torque allowed)	12 m/m $\frac{6}{29}$長110m,3.2t (12m/m $\frac{6}{29}$ long 110m, 3.2t.)
絞盤剎車型式 (Type of brake for winch)	1. 靜音式剎車皮無段數。2. 油路剎車。 (1. Slient-type brake pads without the tier number. 2. Oil circult brake.)
旋轉角度/速度 (Rotation angle/speed)	360度連續旋轉，可微調高、低速。 (360 degrees contsinuous rotation can be adjusted to be high low speed.)
延伸速度 (Extending speed)	高速時30秒，可微調低速。 (Maximum speed of 30 seconds and low speed can be adjusted.)
延伸腳收藏/延伸 (Retrieval/extending of outrigger boom)	2.5 m/6m
油壓系統幫浦型式 (Type of pump for hydraulic system)	活塞式幫浦。 (Piston-typed pump.)
控制閥 (Control valve)	可變速多功能控制閥及安全閥 (Multiple speeds and functions control valve and safety valve.)
標準安全保險配備 (Standard safety insurance equipment)	1. 油壓缸逆止閥3組。 2. 安全閥2組。 3. 過捲警報器。 (1. 3 sets of stopper valve for cylinder. 2. 2 sets for safety valve. 3. Alarm for over-reeling.)
搭配車輛 (Vehicles matching)	總重21t以上。 (Total weight of more than 21t.)
自總重 (Gross weight)	5.3t

吊 桿 型 式 (Types of crane)	QA-109-74全油壓驅動，同步延伸直臂式。 (QA-109-74 Same-time extension of straight arm shaft with hydraulic-control.)
吊桿節數、收藏、延伸 [Sections of crane (retrieval/extending)]	4節，收藏最短4.46m，延伸最長14m (4 sections; Minimum length of 4.46m for retrieval and maximum length of 14m for extending.)
立拱揚程角度 (Lifting angle of lift for column)	水平以上72度。 (Level above 72 degrees.)
立拱揚程速度 (Lifting speed for column)	高速14秒，可微調低速。 (Maximum speed of 14 seconds and low speed can be adjusted.)
絞盤單車速度 (Single-car speed for winch)	高速時38m/分，可微調低速 (Maximum speed of 38m/minute and low speed can be adjusted.)
絞盤鋼索，容許拉力 (Winch cable/torque allowed)	12 m/m $\frac{6}{29}$長110m,3.2t (12m/m $\frac{6}{29}$ long 110m, 3.2t.)
絞盤剎車型式 (Type of brake for winch)	1. 靜音式剎車皮無段數。2. 油路剎車。 (1. Slient-type brake pads without the tier number. 2. Oil circult brake.)
旋轉角度/速度 (Rotation angle/speed)	360度連續旋轉，可微調高、低速。 (360 degrees contsinuous rotation can be adjusted to be high low speed.)
延伸速度 (Extending speed)	高速時30秒，可微調低速。 (Maximum speed of 30 seconds and low speed can be adjusted.)
延伸腳收藏/延伸 (Retrieval/extending of outrigger boom)	2.5 m/6m
油壓系統幫浦型式 (Type of pump for hydraulic system)	活塞式幫浦。 (Piston-typed pump.)
控制閥 (Control valve)	可變速多功能控制閥及安全閥 (Multiple speeds and functions control valve and safety valve.)
標準安全保險配備 (Standard safety insurance equipment)	1. 油壓缸逆止閥3組。 2. 安全閥2組。 3. 過捲警報器。 (1. 3 sets of stopper valve for cylinder. 2. 2 sets for safety valve. 3. Alarm for over-reeling.)
搭配車輛 (Vehicles matching)	總重21t以上。 (Total weight of more than 21t.)
自總重 (Gross weight)	5.1t

吊 桿 型 式 (Types of crane)	QA-109-75全油壓驅動，同步延伸直臂式。 (QA-109-75 Same-time extension of straight arm shaft with hydraulic-control.)
吊桿節數、收藏、延伸 [Sections of crane (retrieval/extending)]	5節，收藏最短4.64m，延伸最長17.37m (5 sections; Minimum length of 4.64m for retrieval and maximum length of 17.37m for extending.)
立拱揚程角度 (Lifting angle of lift for column)	水平以上72度。 (Level above 72 degrees.)
立拱揚程速度 (Lifting speed for column)	高速14秒，可微調低速。 (Maximum speed of 14 seconds and low speed can be adjusted.)
絞盤單車速度 (Single-car speed for winch)	高速時38m/分，可微調低速 (Maximum speed of 38m/minute and low speed can be adjusted.)
絞盤鋼索，容許拉力 (Winch cable/torque allowed)	12 m/m $\frac{6}{29}$長110m,3.2t (12m/m $\frac{6}{29}$ long 110m, 3.2t.)
絞盤剎車型式 (Type of brake for winch)	1. 靜音式剎車皮無段數。2. 油路剎車。 (1. Slient-type brake pads without the tier number. 2. Oil circult brake.)
旋轉角度/速度 (Rotation angle/speed)	360度連續旋轉，可微調高、低速。 (360 degrees contsinuous rotation can be adjusted to be high low speed.)
延伸速度 (Extending speed)	高速時30秒，可微調低速。 (Maximum speed of 30 seconds and low speed can be adjusted.)
延伸腳收藏/延伸 (Retrieval/extending of outrigger boom)	2.5 m/6m
油壓系統幫浦型式 (Type of pump for hydraulic system)	活塞式幫浦。 (Piston-typed pump.)
控制閥 (Control valve)	可變速多功能控制閥及安全閥 (Multiple speeds and functions control valve and safety valve.)
標準安全保險配備 (Standard safety insurance equipment)	1. 油壓缸逆止閥3組。 2. 安全閥2組。 3. 過捲警報器。 (1. 3 sets of stopper valve for cylinder. 2. 2 sets for safety valve. 3. Alarm for over-reeling.)
搭配車輛 (Vehicles matching)	總重21t以上。 (Total weight of more than 21t.)
自總重 (Gross weight)	5.556t

歐規插心式GW 0500~2300型 全油壓驅動同步延伸直臂式

European specification slot-type: GW-0500~2300 Same-time extension of straight arm shaft with hydraulic-control

GW-0775型安裝17噸車體
(17 tons truck with type GW-0775)

GW-A-1375型安裝43噸拖車頭
(43 tons tractor-truck with type GW-A-1375)

GW-A-1075型安裝26噸車體
(26 tons truck with type GW-A-1075)

GW-AA-2377型 國道5號橋墩施工
(Construction on the bridge girber of freeway No.5 with type GW-AA-2377)

GW-A-H-1375型安裝拖車板架(Truck plate with type GW-A-H-1375)

歐規插心式 GW 0500型 全油壓驅動同步延伸直臂式

European specification slot-type: GW-0500 Same-time extension of straight arm shaft with hydraulic-control

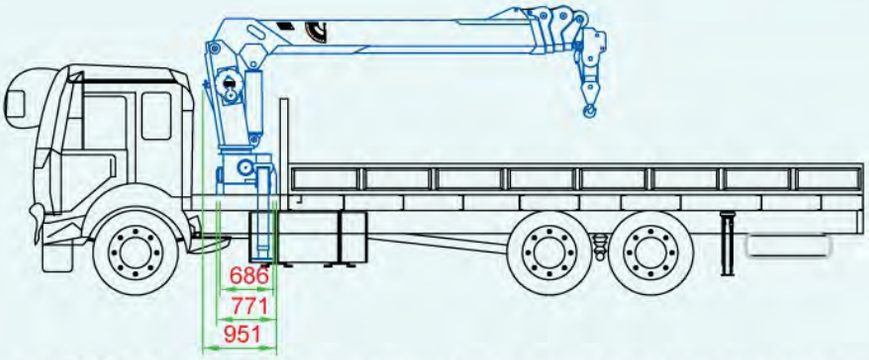

GW-0500型 安裝圖 (GW-0500 type installation picture)

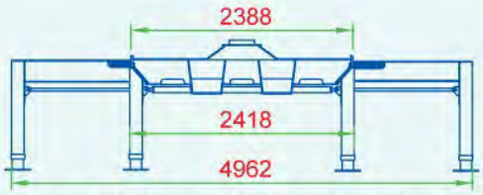

GW-0500型 延伸腳展開圖
(GW-0500 type outrigger boom expand picture)

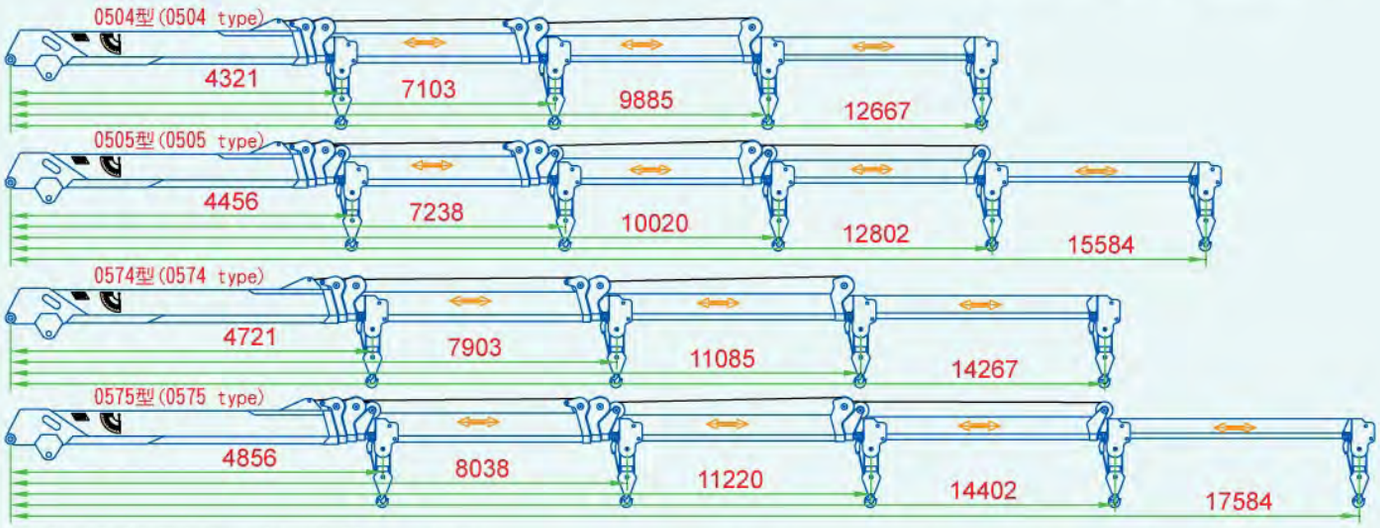

5噸標準型桿臂長度圖(5 tons standard type boom length picture)

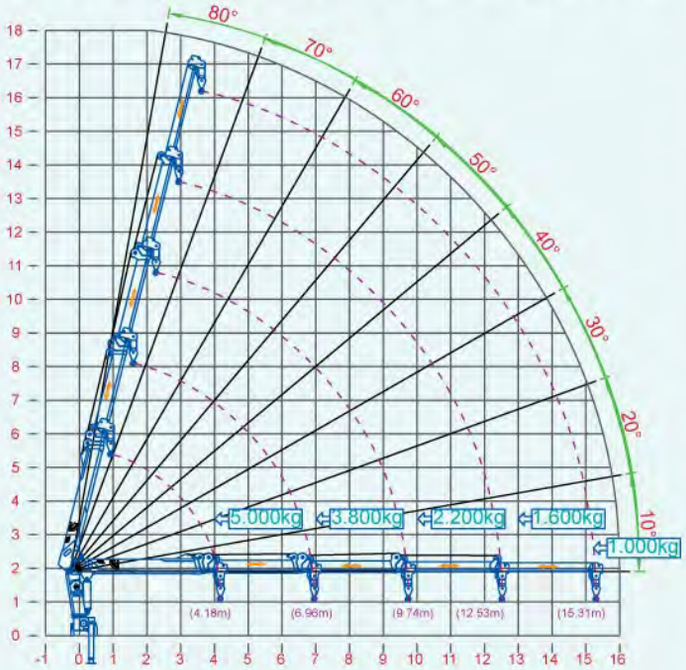

GW-0505型 作業、揚程表(單位m)
GW-0505 type work, lift table (Unit:m)

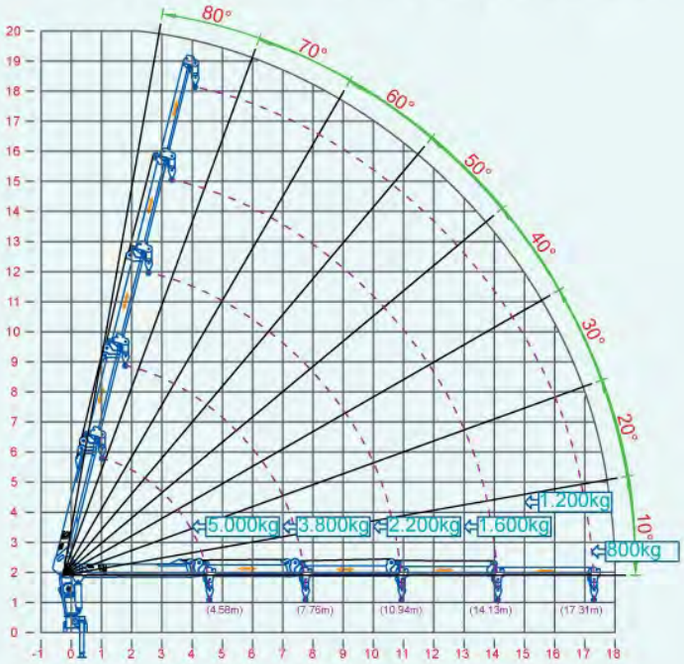

GW-0575型 作業、揚程表(單位m)
GW-0575 type work, lift table (Unit:m)

揚高40°以上可增加吊能50%(The angle of lift above 40 degrees can increase to 50% crane capacity)

歐規插心式 GW 0700型 全油壓驅動同步延伸直臂式

European specification slot-type: GW-0700 Same-time extension of straight arm shaft with hydraulic-control

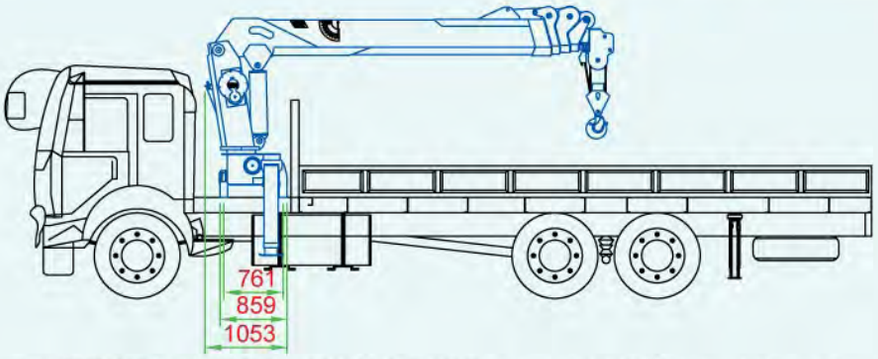

GW-0700型 安裝圖 (GW-0700 type installation picture)

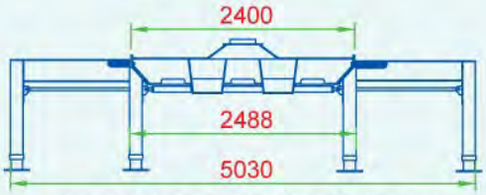

GW-0700型 延伸腳展開圖
(GW-0700 type outrigger boom expand picture)

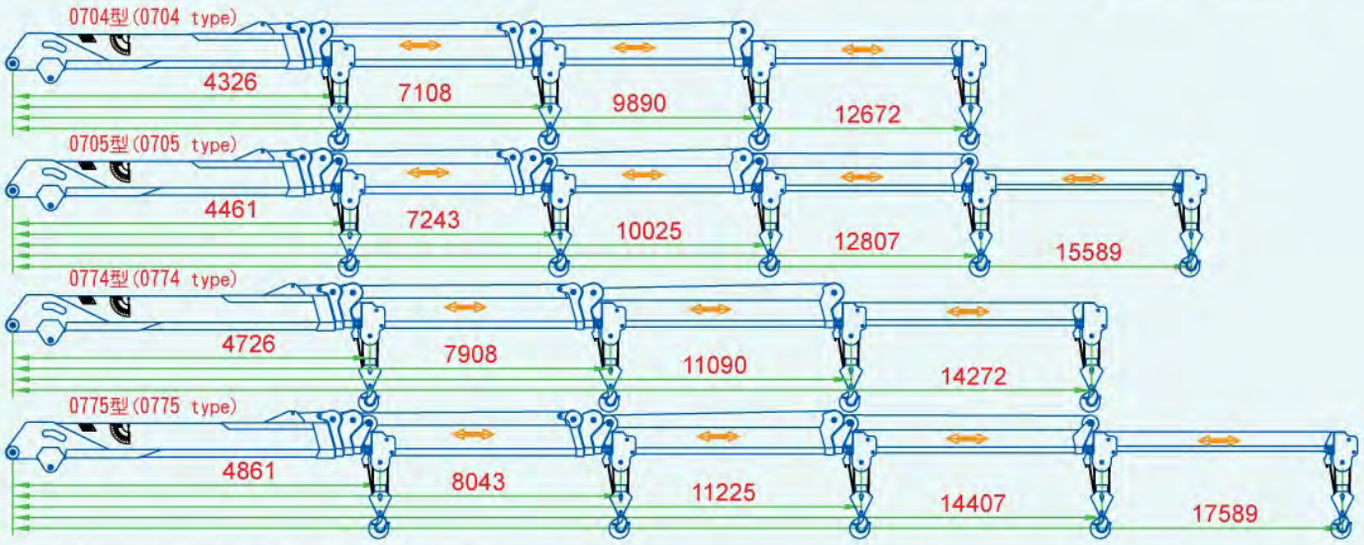

7噸標準型桿臂長度圖(7 tons standard type boom length picture)

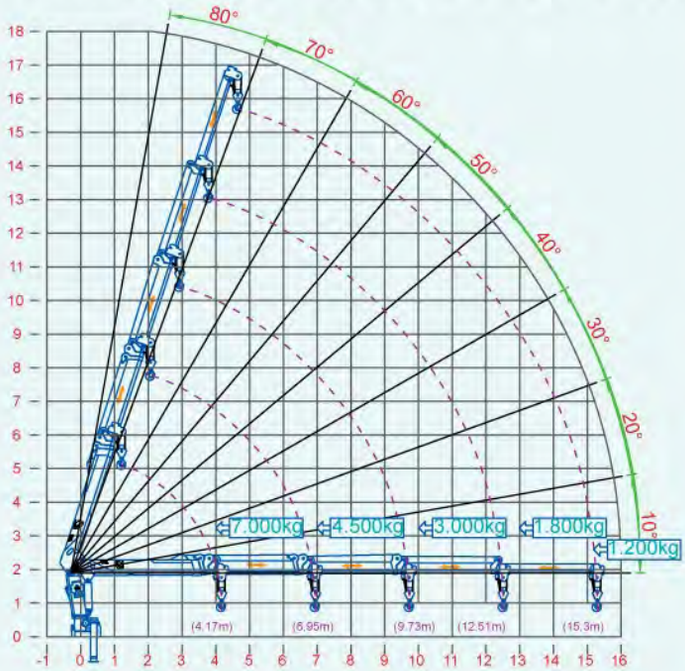

GW-0705型 作業、揚程表(單位m)
GW-0705 type work, lift table (Unit:m)

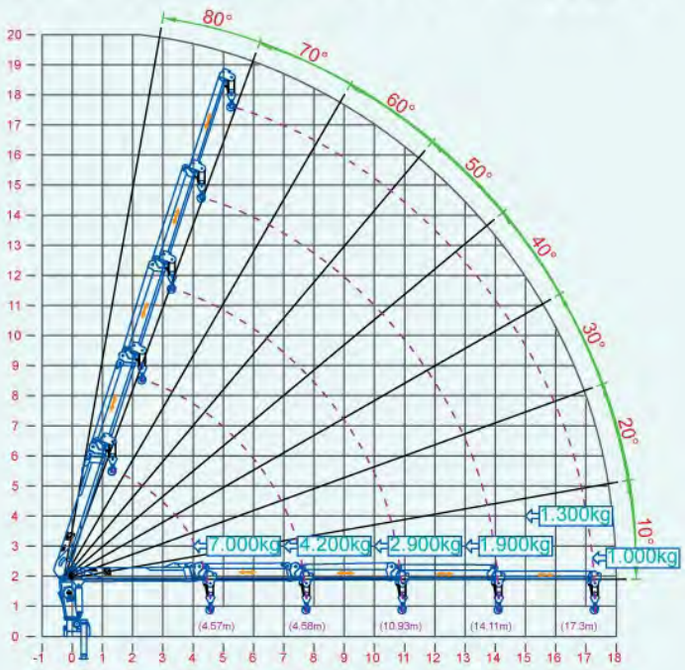

GW-0775型 作業、揚程表(單位m)
GW-0775 type work, lift table (Unit:m)

揚高40°以上可增加吊能50%(The angle of lift above 40 degrees can increase to 50% crane capacity)

歐規插心式GW A-1000-1300型 全油壓驅動同步延伸直臂式

European specification slot-type: GW-A-1000-1300 Same-time extension of straight arm shaft with hydraulic-control

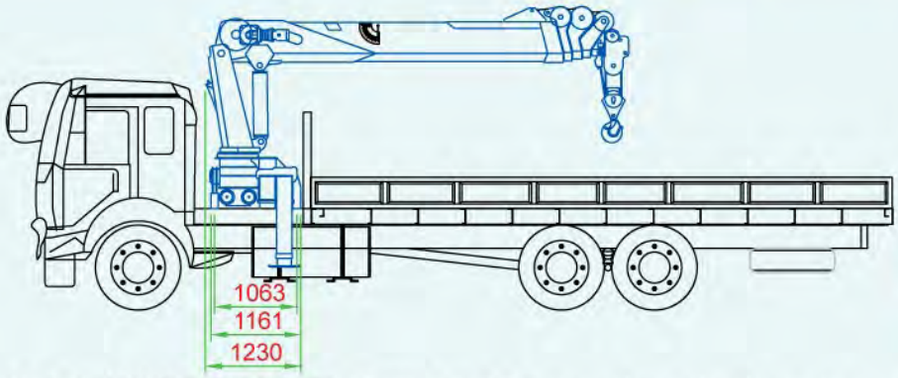

GW-A-1300型 安裝圖 (GW-A-1300 type installation picture)

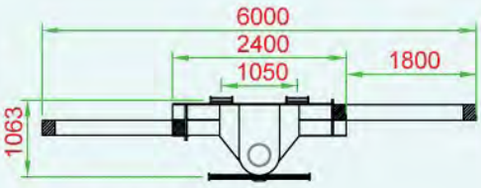

A型腳延伸圖
(A type outrigger picture)

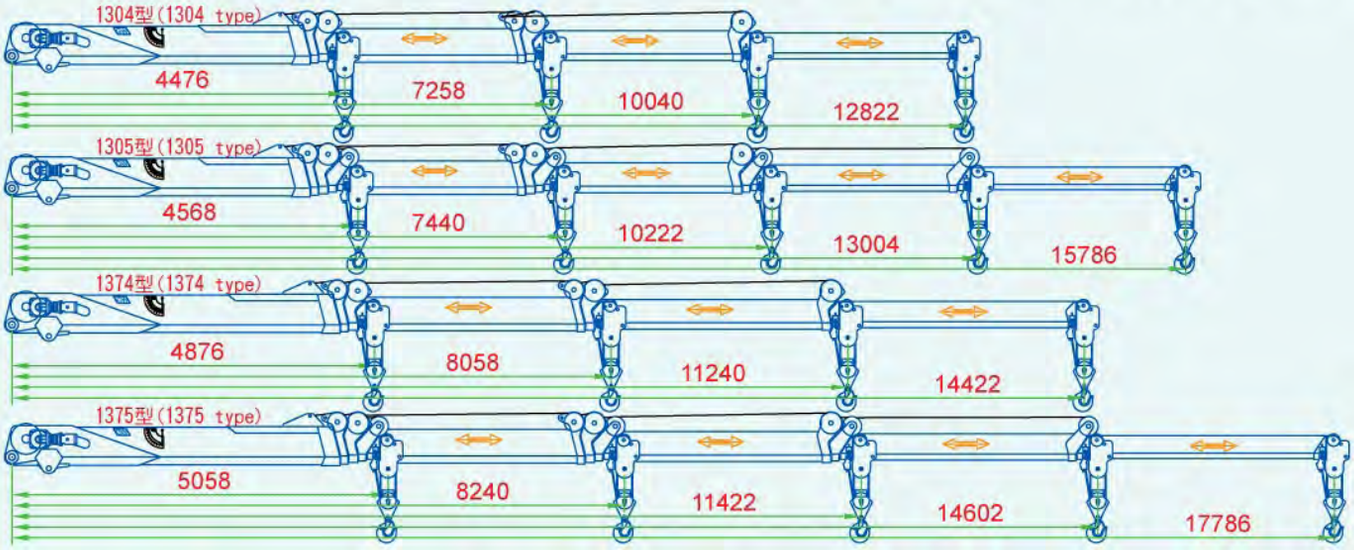

13噸A型桿臂長度圖(13 tons A type boom length picture)

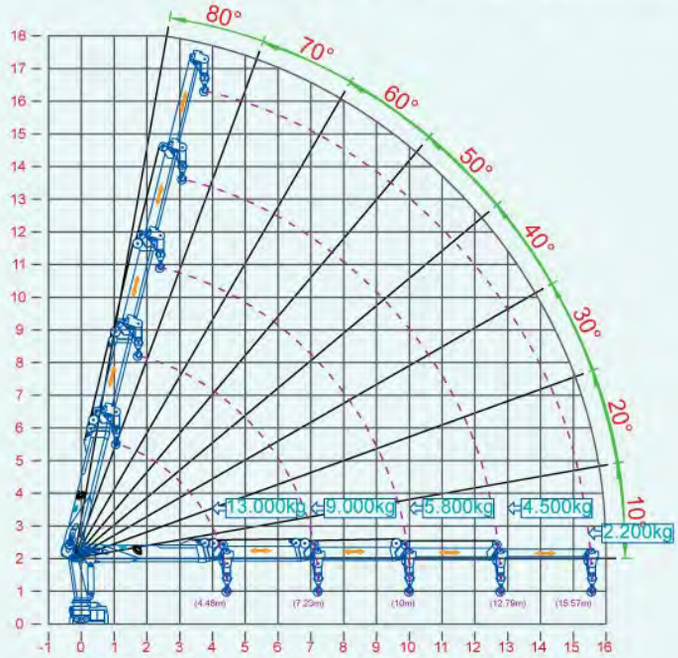

GW-A-1305型 作業、揚程表(單位m)
GW-A-1305 type work, lift table (Unit:m)

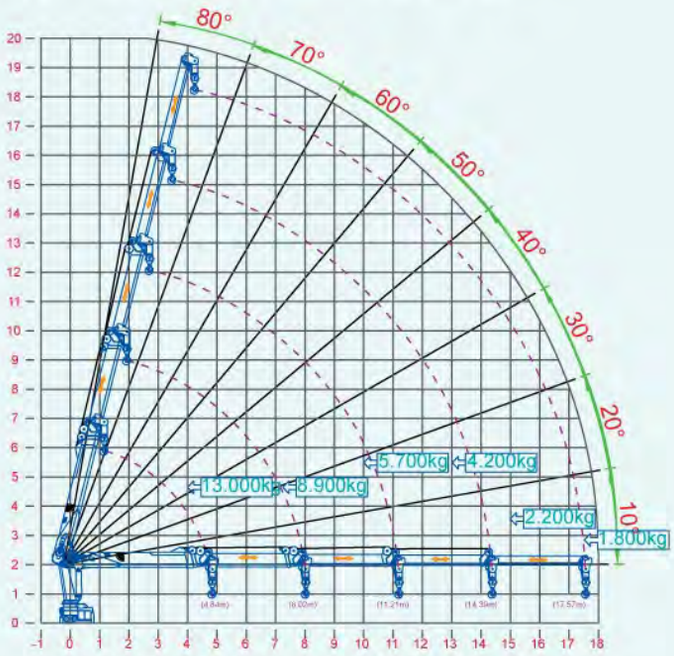

GW-A1375型 作業、揚程表(單位m)
GW-A1375 type work, lift table (Unit:m)

揚高40°以上可增加吊能50%(The angle of lift above 40 degrees can increase to 50% crane capacity)

歐規插心式 GW A-H-1000-1300型 全油壓驅動同步延伸直臂式

European specification slot-type:GW-A-H-1000-1300 Same-time extension of straight arm shaft with hydraulic-control

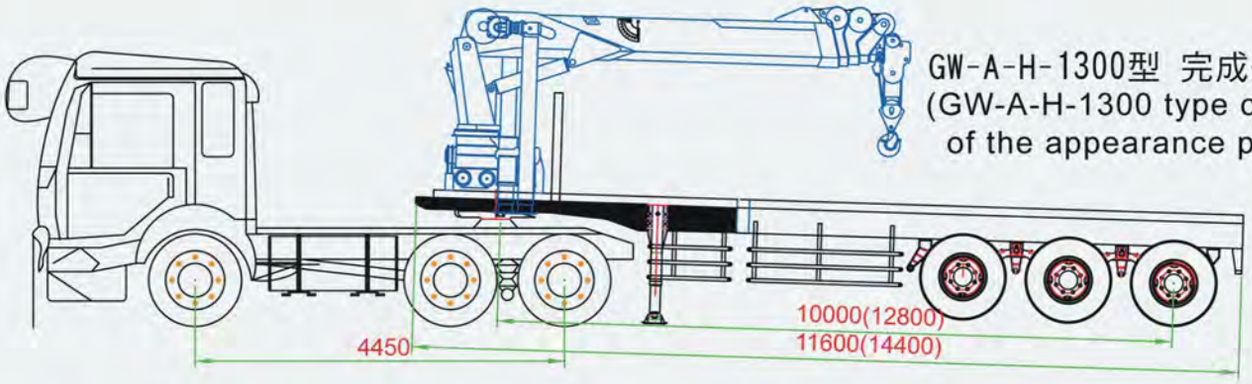

GW-A-H-1300型 完成外觀圖
(GW-A-H-1300 type completion of the appearance picture)

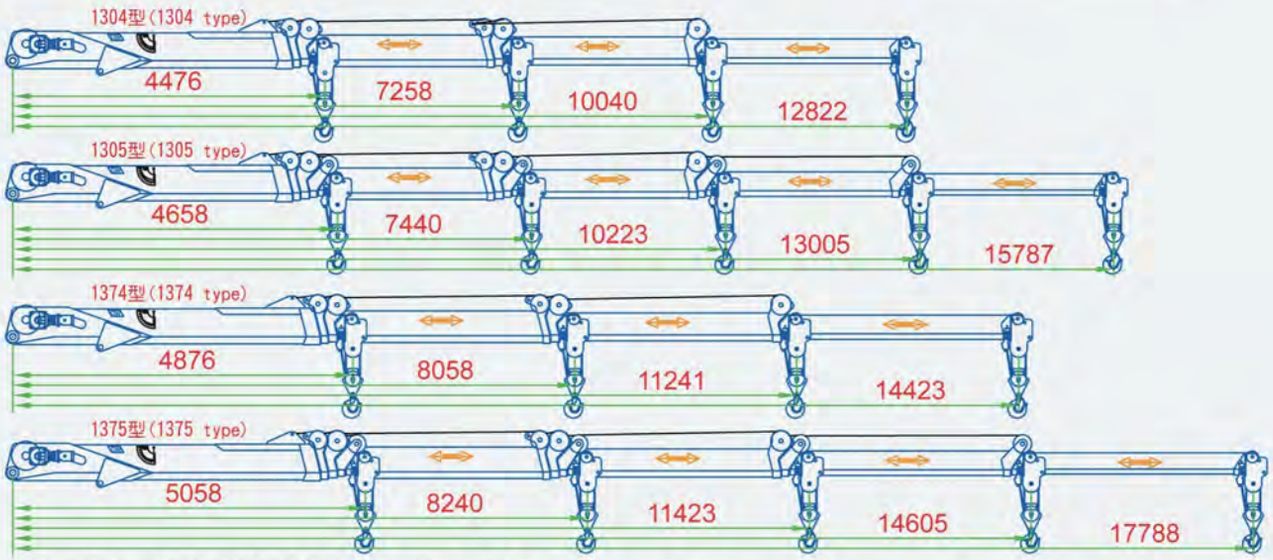

13噸A-H型桿臂長度圖 (13 tons A-Htype boom length picture)

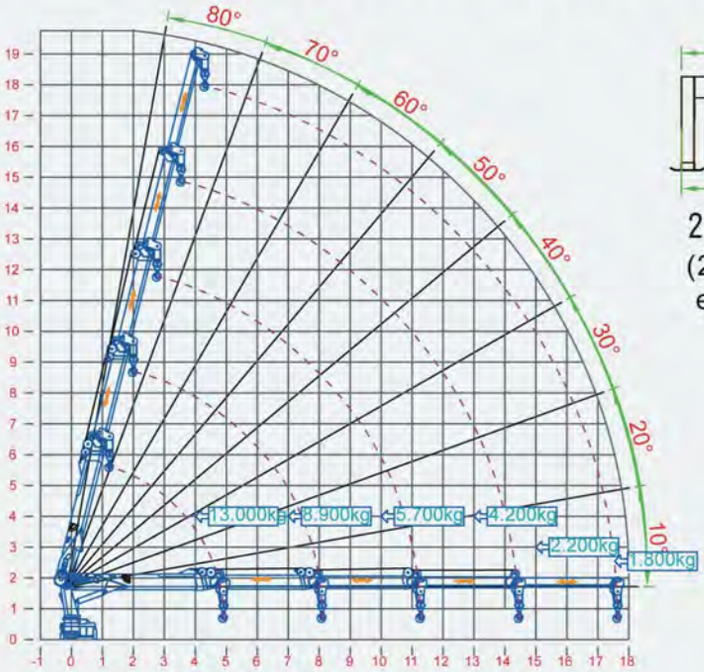

GW-A-H-1375型 作業、揚程表(單位m)
GW-A-H-1375 type work, lift table (Unit:m)

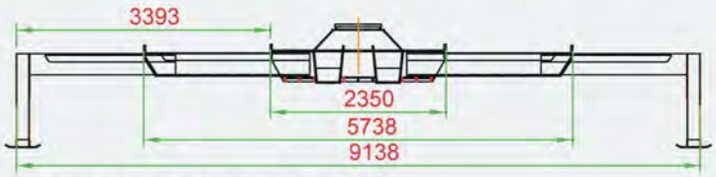

2300型雙A型腳自動延伸圖
(2300 type double A type outrigger automatically extend picture)

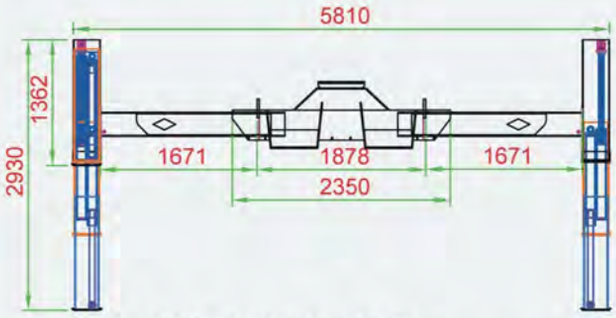

A-H型2節式立腳延伸圖
(A-H type with 2 jack extend picture)

揚高40°以上可增加吊能50%(The angle of lift above 40 degrees can increase to 50% crane capacity)

台灣製造的GW-QA316型

收藏半徑3.58米，延伸全長半徑15.8米

桿長.收藏3.6米***延伸
腳架.收藏2.16米***延伸4.84米，全自動延伸

力與美的結合
中型移動式起重機的天下
適合高速度起重

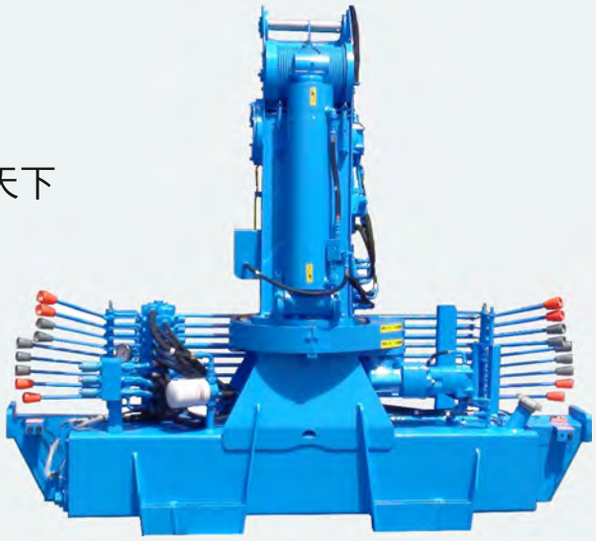

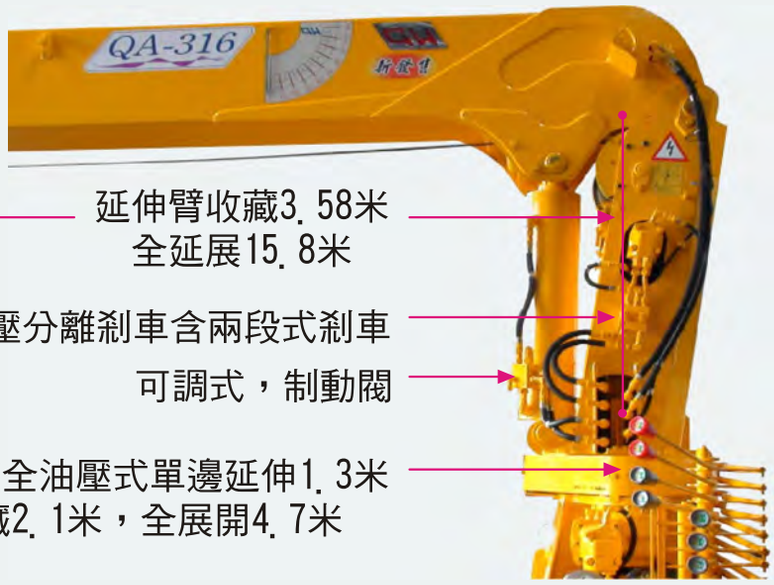

延伸臂收藏3.58米
全延展15.8米

油壓分離剎車含兩段式剎車

可調式，制動閥

外撐座全油壓式單邊延伸1.3米
收藏2.1米，全展開4.7米

安裝車輛6.5噸或以上車輛

GW-QA-310型　尺寸圖

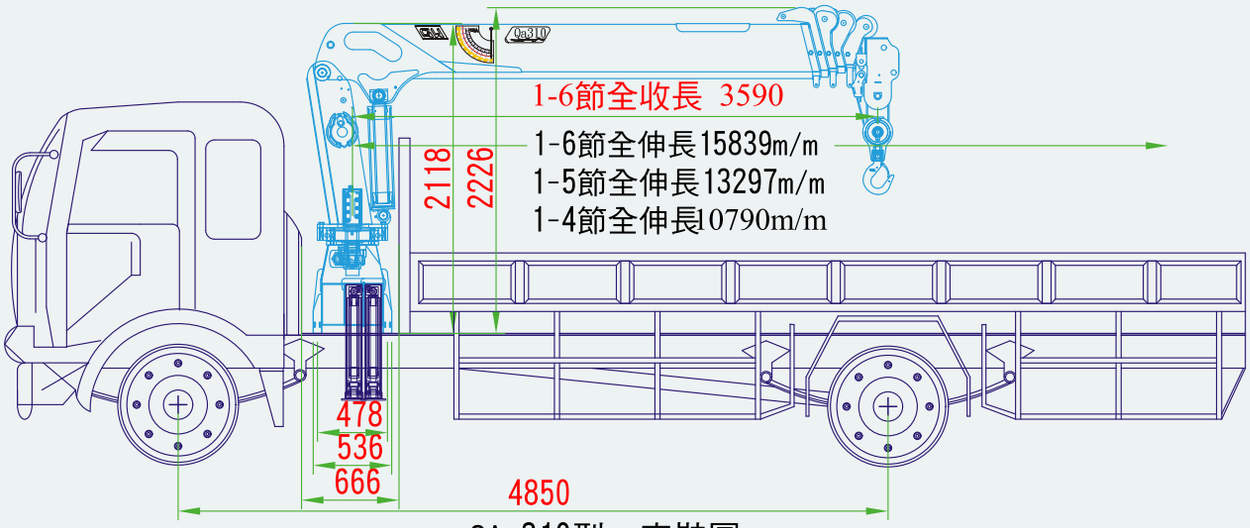

QA-310型　安裝圖

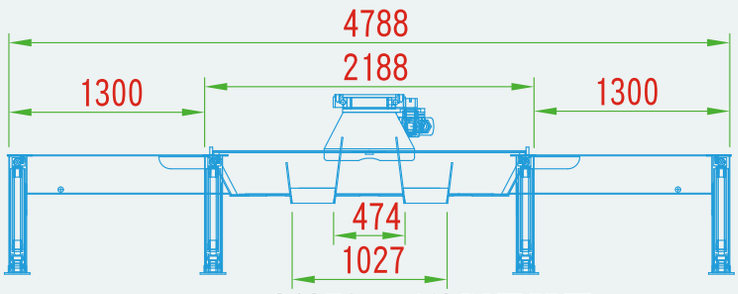

QA-310型　延伸腳展開圖

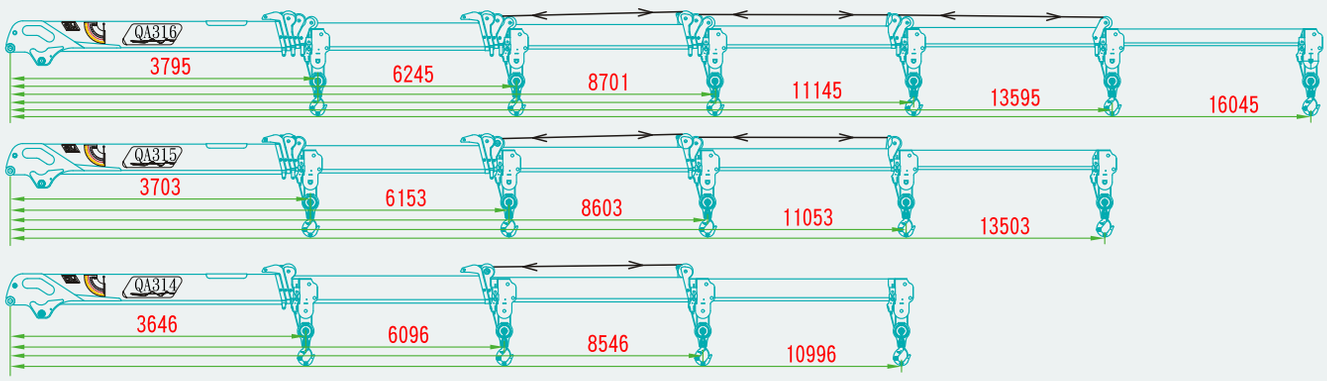

QA-310型　延伸臂展開圖

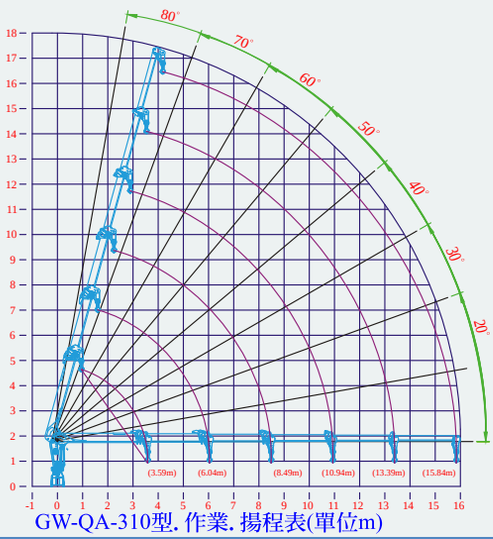

GW-QA-310型. 作業. 揚程表(單位m)

GW-QA-310 額定荷重表 單位:kg						
作業半徑 (m)	吊桿長度 (支點中心距0.211m)					
	3.8	6.25	8.7	11.15	13.6	16.05
2	3060	2650	2350 (2.24m)	1450 (2.88m)		
3	2300	1950	1450	940	650 (3.53m)	
4	2050 (3.58m)	1450	1250	810	580	480 (4.16m)
5		1250	980	580	460	440
6		1050 (6.03m)	580	450	390	370
7			500	370	340	310
8			460	340	300	290
9			420 (8.48m)	310	270	260
10				280	240	220
11				250 (10.93m)	215	195
12					195	175
13					170	150
14					150 (13.38m)	130
15						115
15.83						100 (15.83m)
鋼索卦數	4本卦	4本卦	4本卦	4本卦	4本卦	4本卦

不含吊鉤40kg

GW-QA-4200型 尺寸圖

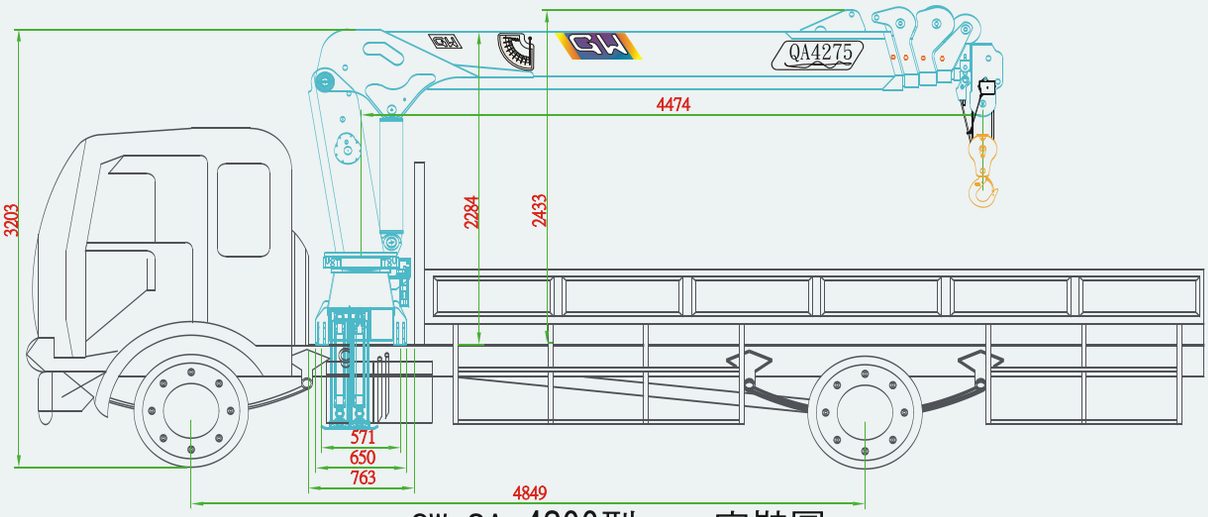

GW-QA-4200型　　安裝圖

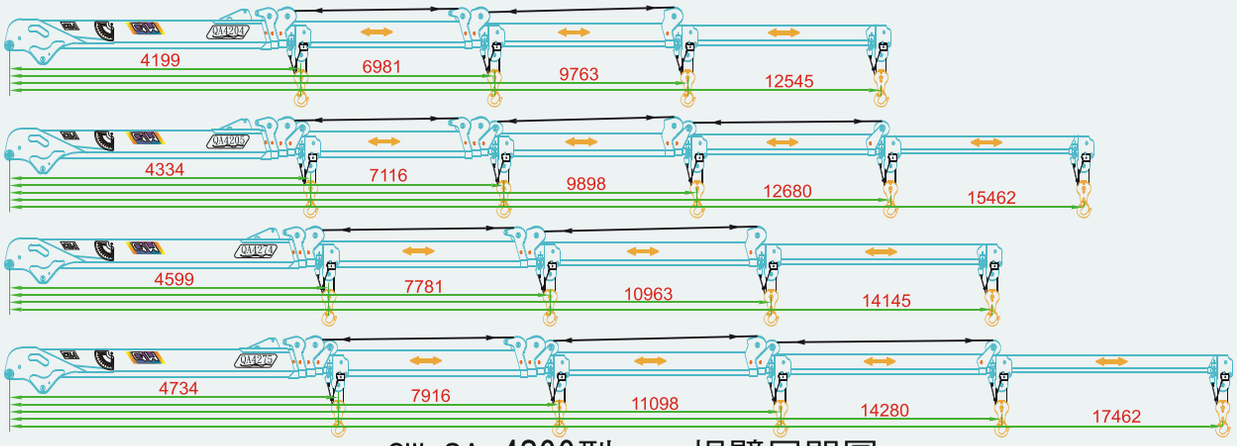

GW-QA-4200型　　桿臂展開圖

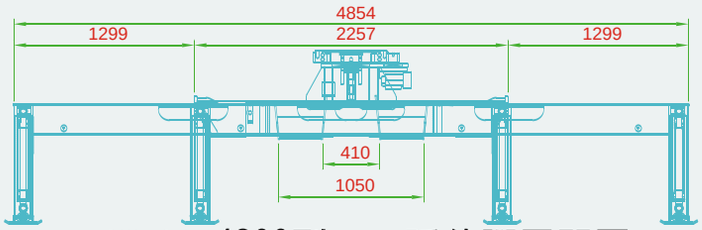

GW-QA-4200型　　延伸腳展開圖

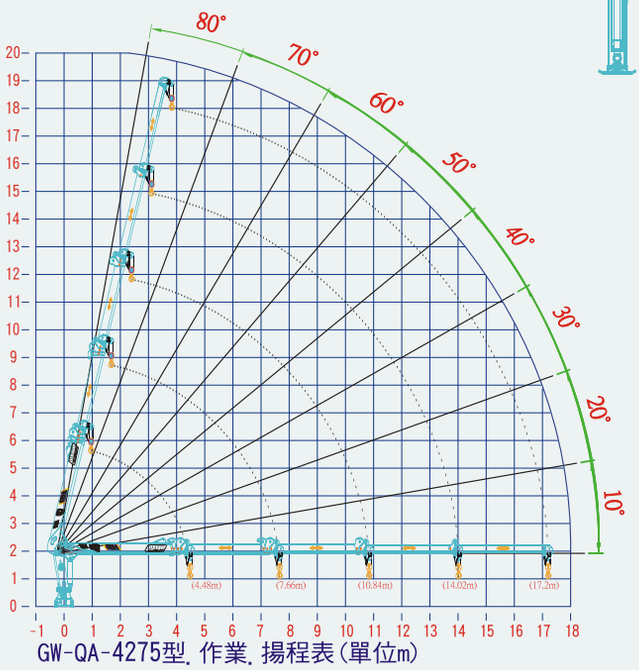

GW-QA-4275型. 作業. 揚程表(單位m)

GW-QA-4275　額定荷重表　單位:kg					
作業半徑 (m)	吊桿長度 (支點中心距0.259m)				
	4.73	7.92	11.1	14.28	17.46
2	3165	2700	2130 (2.4m)		
3	2880	2160	1850	1400 (3.11m)	1190 (3.83m)
4	2100	1750	1650	1350	1110
5	2010 (4.48m)	1600	1400	1210	990
6		1150	1135	1070	870
7		1050	990	950	755
8		950 (7.66m)	865	820	650
9			765	715	560
10			670	600	475
11			510 (10.84m)	495	425
12				445	360
13				380	275
14				280 (14.02m)	235
15					215
16					190
17					170
17.2					145 (17.2m)
鋼索卦數	4本卦	4本卦	4本卦	4本卦	4本卦

不含吊鉤35kg

新開發專利
全旋轉行車鎖定器

台灣自有品牌研發 設計 製造 維修
新發售 中型車所使用起重機 QA-4200型

起重機自重2.35噸，荷重4噸，作業半徑17.2米，揚高20米。
是你擴展事業版圖的絕佳幫手。

高空作業，輕鬆俐落。

全旋轉行車鎖定器，安全至上。

全油壓同步伸縮，比例式遙控，讓您成為同行中的TOP1

AX-7976型7噸起重機操作示圖及吊重物時比例示圖

*****操作手起重物體不吊的原則:
1.物品重量超過起重機的荷重,不吊.
2.吊掛物,在吊移中不穩時,不吊.
3.歪拉,斜吊,起重機上下方有電線時,不吊.
4.車輛在狹窄場所,腳架無法展開時,不吊.
參考下圖比例

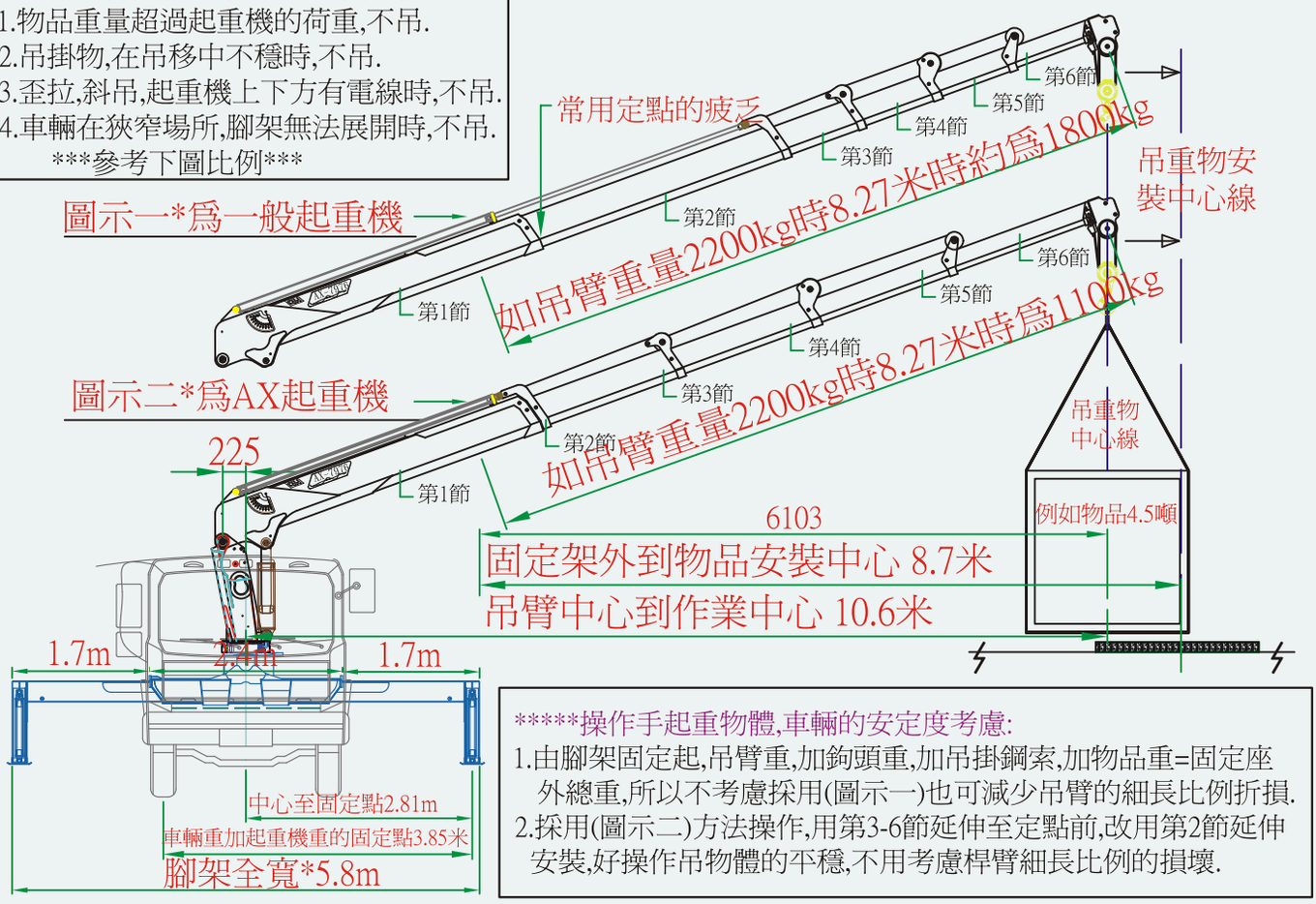

*****操作手起重物體,車輛的安定度考慮:
1.由腳架固定起,吊臂重,加鉤頭重,加吊掛鋼索,加物品重=固定座外總重,所以不考慮採用(圖示一)也可減少吊臂的細長比例折損.
2.採用(圖示二)方法操作,用第3-6節延伸至定點前,改用第2節延伸安裝,好操作吊物體的平穩,不用考慮桿臂細長比例的損壞.

AX-7976型作業半徑

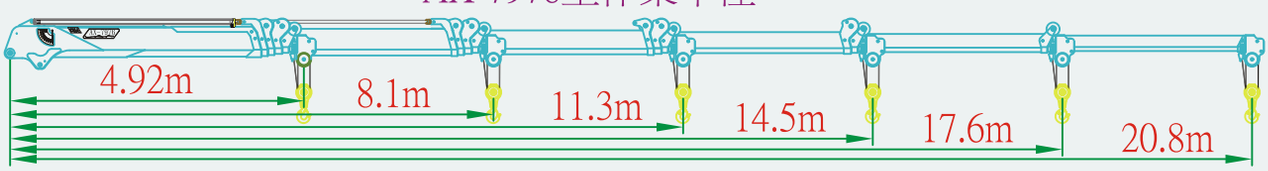

操作閥的使用

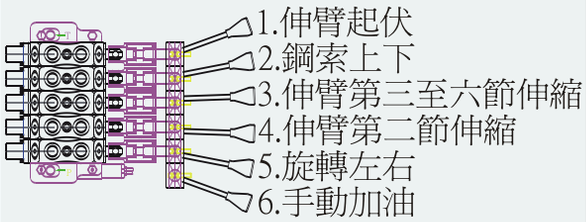

AX-7976型配件

1.荷重加大旋轉盤
2.旋轉齒輪箱加大
3.360度行車鎖定器
4.立柱加大型
5.主鋼索10m/m/125m
6.延伸臂加大型

操作起重機,了解起重機:

1.AX型起重機原至2002年本公司製GW2307型 ,吊重23噸,半徑23.6米 .
2.不用考慮常用定點久的金屬疲乏.
3.常用伸臂細長比的考慮點.

AX-7976型的延伸臂油壓缸出力:

1.延伸第2節單缸單節數驅動垂直上昇10.5噸.
2.延伸第3至6節雙缸4節驅動垂直上升5噸.

1.底座含伸至立腳組,總重=2300kg.
2.延伸臂手1-6節,總重 =2200kg.
3.零件* 油箱*螺絲*鉤頭 = 180kg.

AX-7976型7噸起重機操作示圖及吊重物時比例示圖

AX7976型

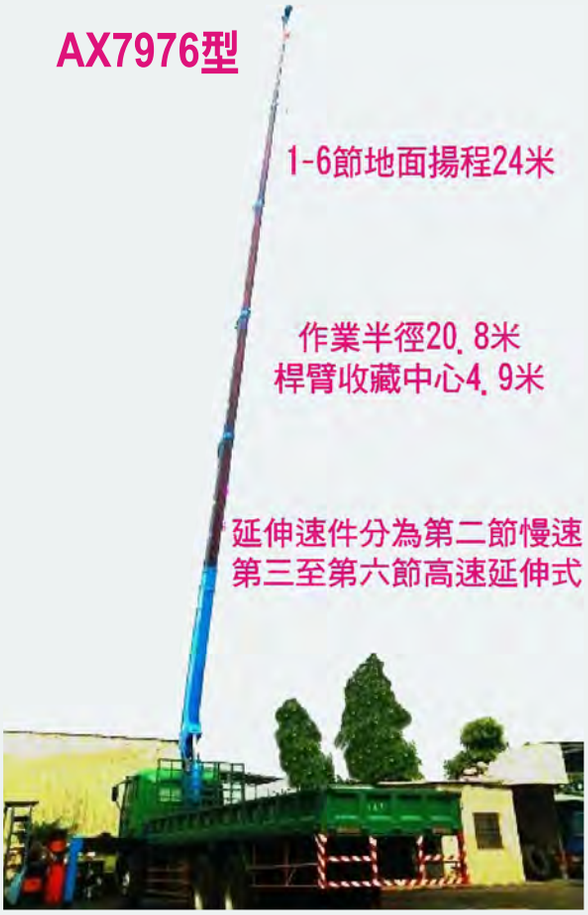

起重業內行人使用的起重機

固定型直臂式、屈臂式：為碼頭邊、船上起重

Fix location crane : Telescopic & Articulate boom crane for dock and marine.

GW-EF 屈臂收藏式外觀 (GW-EF Aritculate boom)

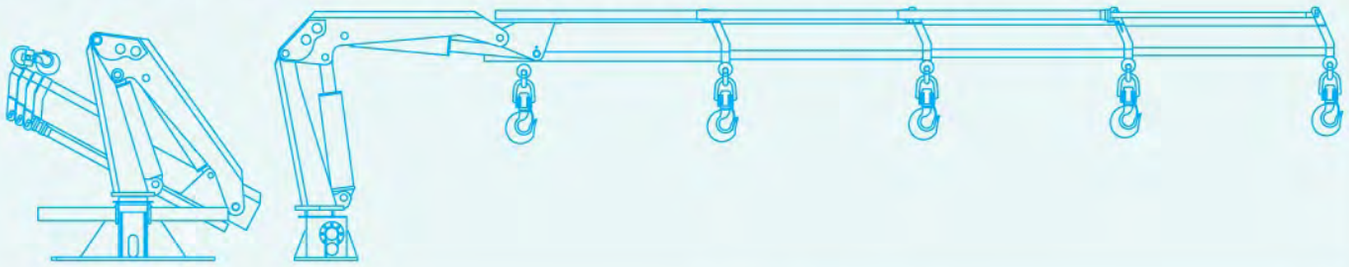

GW-GF 直臂鋼索式外觀 (GW-GF Telescopic boom)

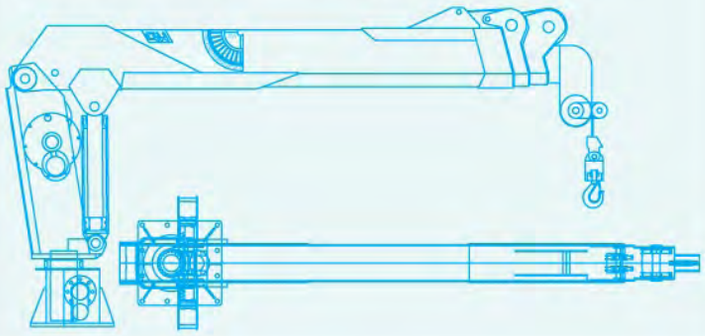

GW-GF 0773 型 台灣中油高雄港碼頭用
(GW-GF 0773 type Taiwan CPC at Kaohsiung port dock)

GW-GF 0774 型 朝陽漁港碼頭用
(GW-GF 0774 type Chaoyang port dock)

GW-GF 0503 型 漁船起重用
(GW-GF 0503 type boat with crane)

GW-GF 0775 型 中國宏東遠洋漁業
(GW-GF 0775 type China Hong-dong pelagic fishing)

GW-GF 0503 型 漁船拖網用
(GW-GF 0503 type fishing boat with trawl)

GW 0500~0700 屈臂式抓斗、起重二用型

GW-E-0500~0700 Multi-purpose octopus grab and crane

GW-E- 0700抓斗型 (GW-E- 0700 Grab type)

GW-E- 0500抓斗型 (GW-E- 0500 Grab type)

GW-AA-E-2306型 屈臂折疊式
(GW-AA-E-2306 type articulate cranes)

屈臂式抓斗、起重二用型：

速度快
受力高
動作靈活
強力抓斗
是您累積財富的最佳利器！

Multi-purpose octopus grab and crane:

Fast.

High stress.

Flexible motion.

Power Grab.

Your best helper to the accumulation of wealth.

全油壓驅動同步延伸直臂式

Same-time extension of straight arm shaft with hydraulic-control

GW-AH-1375 型 拖車托架 — 起重NO.1　GW-AH-1375 type truck plate - the top of crane.

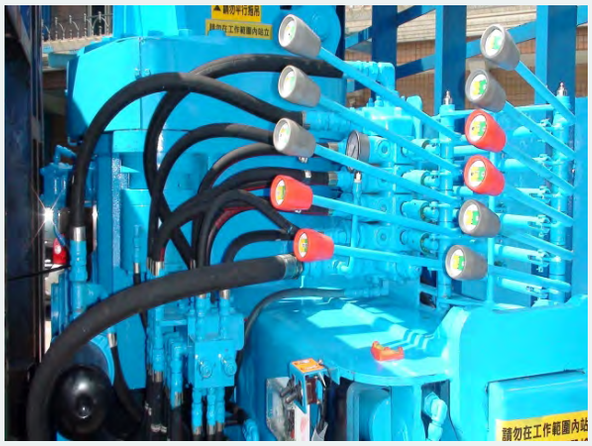

歐洲原裝進口-可變速多功能控制閥
Europe imported-multiple speeds and functions control valve.

GW-AA-E-2306 型 屈臂王者
GW-AA-E-2306 type king of articulate cranes.

GW-QA-10975 型 360度旋轉
GW-QA-10975 type crane 360 degrees rotation.

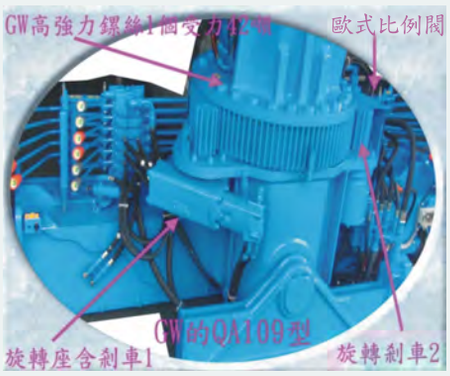

新研發起重利器
New developed weapons of crane.

卓越的起重搬運專家

Excellent crane of experts

兩個絞盤可用遙控制動及手動控制

Twin winch brake and manual remote control available.

台灣特有的起重及運輸，安裝兩用車

Crane and transport unique to Taiwan.

起重能力至13噸

Lifting capacity of up to 13 tons.

地面揚高可到21米，吊重1噸

Lifting height of up to 21 meters, lifting load 1 ton.

記事欄 (NOTE)

車頭前方禁止作業

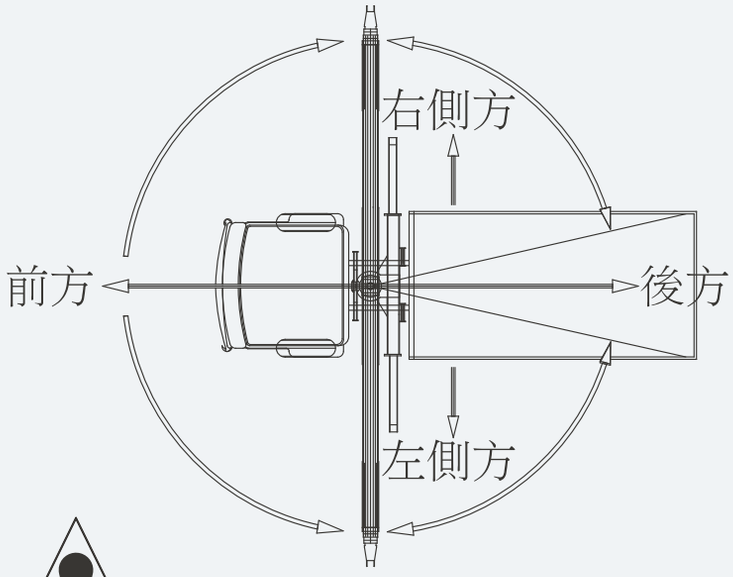

執行作業所需注意事項:

1. 作業領域設置警示標誌。
2. 荷重物不得超過額定荷重。
3. 荷重物不得由工作人員上方經過。

揚長作業時，注意現場電線。
(Pay attention to wire when lift high.)

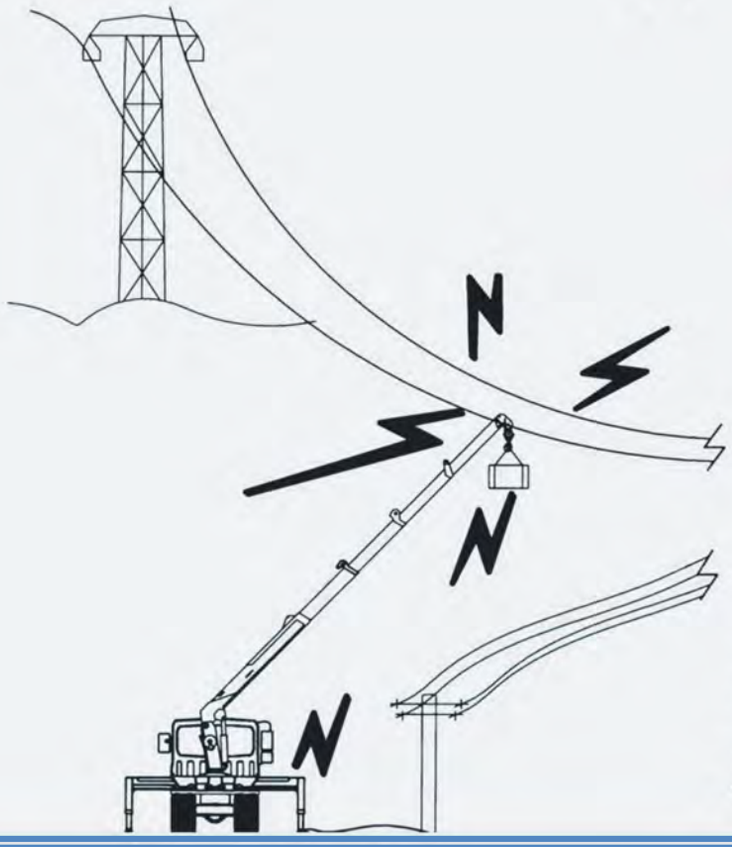

勿超額荷重，以免發生危險。
(Do not over load in order to avoid danger.)

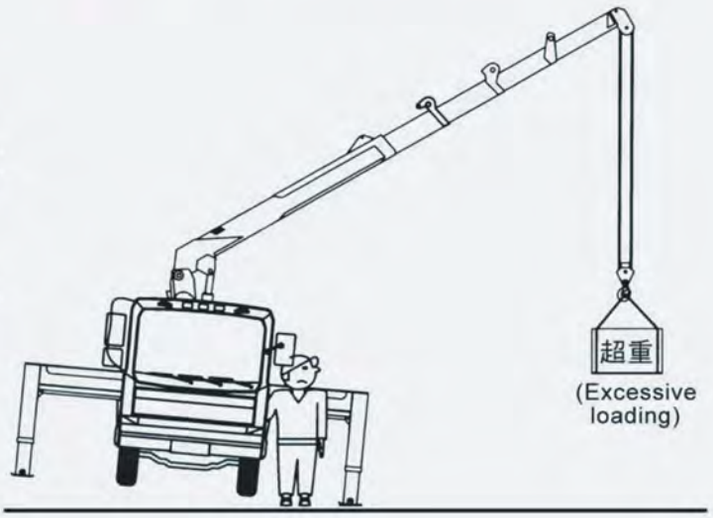

高速度・高效率・全同步延伸式起重機

High speed, great efficiency, extend synchronously boom crane

國瑋發力 機械有限公司

GW MACHINERY CO., LTD.

公　司：宜蘭縣蘇澳鎮龍德工業區德興一路22號
電　話：03-9908870　傳　真：03-9909357
E-MAIL:fal.li@msa.hinet.net　LINE ID:gwcrane
ADD：No.22,Desing 1st Rd,Su-ao Township,
Yilan County 270 Taiwan (R.O.C)
TEL：886-3-9908870　FAX：886-3-9909357
網　址：http://gw-crane.com.tw